CHAPTER 3.
PERIODIC CHECKS AND ADJUSTMENTS

INTRODUCTION 3-1

PERIODIC MAINTENANCE CHART FOR EMISSION CONTROL SYSTEM 3-1

GENERAL MAINTENANCE AND LUBRICATION CHART 3-2

RIDER AND PASSENGER SEATS 3-3

FUEL TANK 3-4

COWLINGS 3-5
- REMOVAL 3-7
- INSTALLATION 3-7

AIR FILTER CASE AND IGNITION COILS 3-8
- REMOVAL 3-10
- INSTALLATION 3-10

ENGINE 3-11
- ADJUSTING THE VALVE CLEARANCE 3-11
- SYNCHRONIZING THE CARBURETORS 3-16
- ADJUSTING THE ENGINE IDLING SPEED 3-18
- ADJUSTING THE THROTTLE CABLE FREE PLAY 3-20
- CHECKING THE SPARK PLUGS 3-22
- CHECKING THE IGNITION TIMING 3-23
- MEASURING THE COMPRESSION PRESSURE 3-24
- CHECKING THE ENGINE OIL LEVEL 3-26
- CHANGING THE ENGINE OIL 3-27
- MEASURING THE ENGINE OIL PRESSURE 3-29
- ADJUSTING THE CLUTCH CABLE FREE PLAY 3-30
- CLEANING THE AIR FILTER ELEMENT 3-31
- CHECKING THE CARBURETOR JOINTS 3-32
- CHECKING THE FUEL HOSES AND FUEL FILTER 3-32
- CHECKING THE CRANKCASE BREATHER HOSE 3-33
- CLEANING THE AIR INTAKE SYSTEM 3-33
- CHECKING THE EXHAUST SYSTEM 3-34
- CHECKING THE COOLANT LEVEL 3-35
- CHECKING THE COOLING SYSTEM 3-35
- CHANGING THE COOLANT 3-36

CHASSIS 3-39
- ADJUSTING THE FRONT BRAKE 3-39
- ADJUSTING THE REAR BRAKE 3-39
- CHECKING THE BRAKE FLUID LEVEL 3-41
- CHECKING THE BRAKE PADS 3-42

ADJUSTING THE REAR BRAKE LIGHT SWITCH 3-42
CHECKING THE BRAKE HOSES 3-43
BLEEDING THE HYDRAULIC BRAKE SYSTEM 3-43
ADJUSTING THE SHIFT PEDAL 3-45
ADJUSTING THE DRIVE CHAIN SLACK 3-45
LUBRICATING THE DRIVE CHAIN 3-47
CHECKING AND ADJUSTING THE STEERING HEAD 3-47
CHECKING THE FRONT FORK 3-50
ADJUSTING THE FRONT FORK LEGS 3-51
ADJUSTING THE REAR SHOCK ABSORBER ASSEMBLY 3-54
CHECKING THE TIRES 3-57
CHECKING THE WHEELS 3-59
CHECKING AND LUBRICATING THE CABLES 3-60
LUBRICATING THE LEVERS AND PEDALS 3-60
LUBRICATING THE SIDESTAND 3-60
LUBRICATING THE REAR SUSPENSION 3-60

ELECTRICAL SYSTEM 3-61
CHECKING AND CHARGING THE BATTERY 3-61
CHECKING THE FUSES 3-66
REPLACING THE HEADLIGHT BULBS 3-68
ADJUSTING THE HEADLIGHT BEAMS 3-69

EB300000

PERIODIC CHECKS AND ADJUSTMENTS

INTRODUCTION

This chapter includes all information necessary to perform recommended checks and adjustments. If followed, these preventive maintenance procedures will ensure more reliable vehicle operation, a longer service life and reduce the need for costly overhaul work. This information applies to vehicles already in service as well as to new vehicles that are being prepared for sale. All service technicians should be familiar with this entire chapter.

EB301000

PERIODIC MAINTENANCE CHART FOR EMISSION CONTROL SYSTEM

No.		ITEM	ROUTINE	INITIAL	ODOMETER READINGS				
				600 mi (1,000 km) or 1 month	4,000 mi (7,000 km) or 6 months	8,000 mi (13,000 km) or 12 months	12,000 mi (19,000 km) or 18 months	16,000 mi (25,000 km or 24 months	20,000 mi (31,000 km) or 30 months
1	*	Valve clearance	• Check and adjust valve clearance when engine is cold.	Every 26,600 mi (42,000 km)					
2		Spark plugs	• Check condition. • Adjust gap and clean. • Replace at 8,000 mi (13,000 km) or 12 months and thereafter every 8,000 mi (12,000 km) or 12 months.		√	Replace	√	Replace	√
3	*	Crankcase ventilation system	• Check ventilation hose for cracks or damage. • Replace if necessary.		√	√	√	√	√
4	*	Fuel line	• Check fuel hose for cracks or damage. • Replace if necessary.		√	√	√	√	√
5	*	Fuel filter	• Replace initial 20,000 mi (31,000 km) and thereafter every 20,000 mi (31,000 km).						Replace
6	*	Exhaust system	• Check for leakage. • Retighten if necessary. • Replace gasket(s) if necessary.		√	√	√	√	√
7	*	Carburetor Synchronization	• Adjust synchronization of carburetors.	√	√	√	√	√	√
8	*	Idle speed	• Check and adjust engine idle speed. • Adjust throttle cable free play.		√	√	√	√	√
9	*	Evaporative emission control system**	• Check control system for damage. • Replace if necessary.				√		√

* Since these items require special tools, data and technical skills, they should be serviced by a Yamaha dealer.

** California only.

GENERAL MAINTENANCE AND LUBRICATION CHART

No.		ITEM	ROUTINE	INITIAL	ODOMETER READINGS				
				600 mi (1,000 km) or 1 month	4,000 mi (7,000 km) or 6 months	8,000 mi (13,000 km) or 12 months	12,000 mi (19,000 km) or 18 months	16,000 mi (25,000 km) or 24 months	20,000 mi (31,000 km) or 30 months
1		Engine oil	• Replace. Warm engine before draining.	√	√	√	√	√	√
2	*	Engine oil filter	• Replace at 600 mi (1,000 km) or 1 month, and thereafter every 8,000 mi (12,000 km) or 12 months.	√		√		√	
3	*	Air filter / Surge tank	• Clean. • Replace if necessary.		√	√	√	√	√
4	*	Cooling system	• Check hose for cracks or damage. • Replace if necessary.		√	√	√	√	√
			• Replace coolant every 24 months. • Ethylene glycol anti-freeze coolant.					Replace	
5	*	Brake system	• Check operation, pad wear, and fluid leakage. (See NOTE.) • Correct if necessary.	√	√	√	√	√	√
6	*	Clutch	• Check operation. • Correct if necessary.	√	√	√	√	√	√
7	*	Control cable	• Apply chain lube thoroughly. • Yamaha chain and cable lube or SAE 10 W 30 motor oil.	√	√	√	√	√	√
8	*	Swing arm pivot bearing	• Check bearing assembly for looseness. • Moderately repack every 16,000 mi (24,000 km) or 24 months. • Lithium soap base grease.			√		Repack	
9	*	Rear suspension link pivots	• Check operation. • Correct if necessary.			√		√	
10	*	Rear shock absorber	• Check operation and oil leakage. • Replace if necessary.		√	√	√	√	√
11	*	Front fork	• Ckeck operation and leakage. • Replace if necessary.		√	√	√	√	√
12	*	Steering bearings	• Check bearing assembly for looseness. • Correct accordingly. • Moderately repack every 16,000 mi (24,000 km). • Lithum soap base grease.		√	√	√	Repack	√
13		Brake / clutch lever pivot shaft	• Apply chain lube lightly. • Yamaha chain and cable lube or SAE 10 W 30 motor oil.		√	√	√	√	√
14		Brake pedal and shift pedal shafts	• Apply chain lube lightly. • Yamaha chain and cable lube or SAE 10 W 30 motor oil.		√	√	√	√	√
15	*	Drive chain	• Check chain slack / alignment condition. • Adjust and lubricate chain throughly. • SAE 30 W-50 W motor oil.	Every 600 mi (1,000 km) and after washing the motorcycle or riding in the rain					
16	*	Wheel bearings	• Check bearing for smooth rotation.		√	√	√	√	√
17	*	Sidestand pivot	• Check operation and lubricate. • Apply chain lube lightly. • Yamaha chain and cable lube or SAE 10 W 30 motor oil.		√	√	√	√	√
18	*	Sidestand switch	• Check and clean or replace if necessary.	√	√	√	√	√	√
19	*	Chassis fasteners	• Check all chassis fittings and fasteners. • Correct if necessary.		√	√	√	√	√

* Since these items require special tools, data and technical skills, they should be serviced by a Yamaha dealer.

NOTE:

For odometer readings or time periods higher than 20,000 mi (31,000 km) or 30 months, repeat the same maintenance as listed in the chart from the 4,000 mi (7,000 km) or 6 months interval.

NOTE:

- The air filter needs more frequent service if you are riding in unusually wet or dusty areas.
- Hydraulic brake system
  - When disassembling the master cylinder or caliper cylinder, always replace the brake fluid. Check the brake fluid level reqularly and fill as required.
  - Replace the oil seals on the inner parts of the master cylinder and caliper cylinder every two years.
  - Replace the brake hoses every four years or if cracked or damaged.

EB302000

RIDER AND PASSENGER SEATS

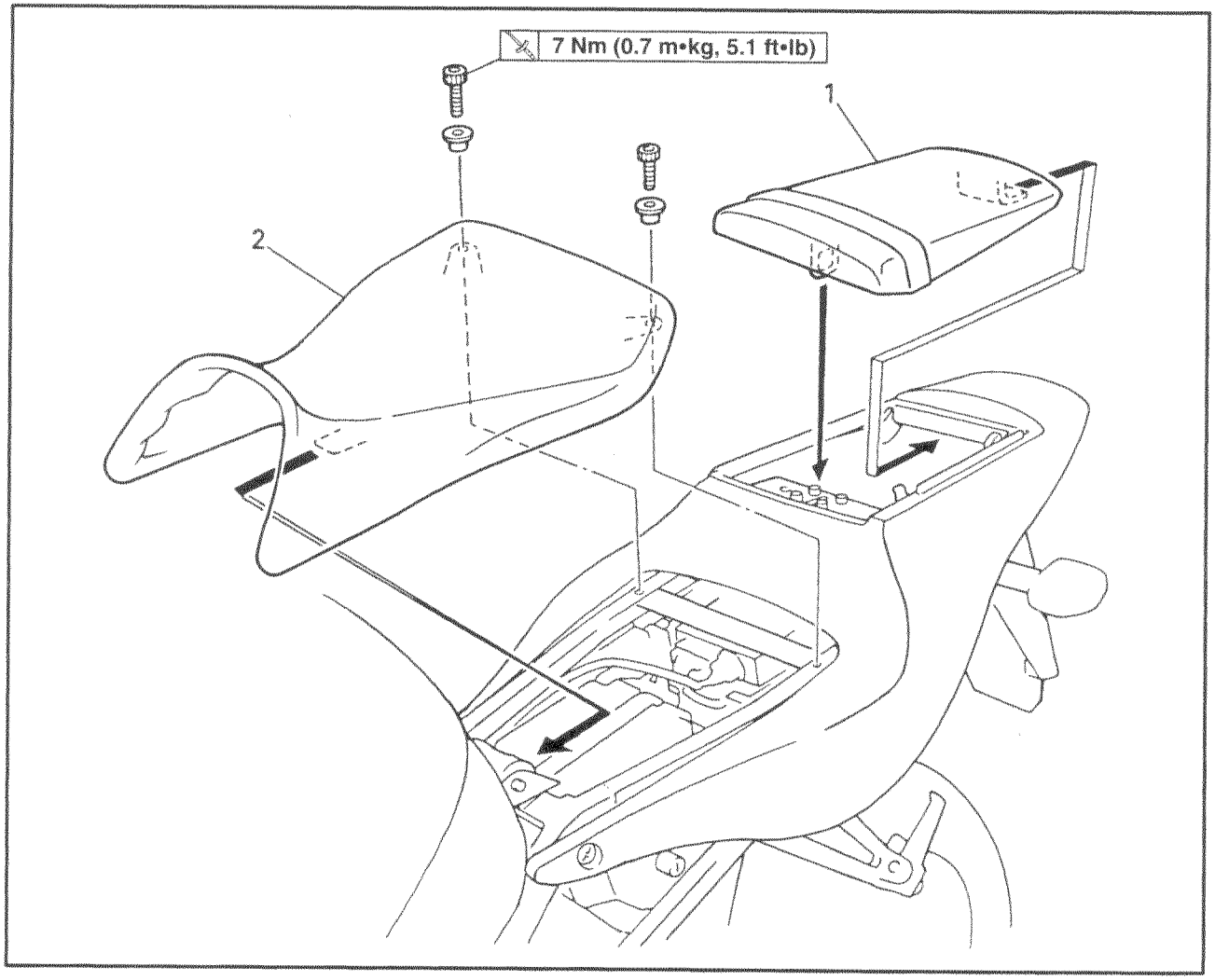

Order	Job/Part	Q'ty	Remarks
	Removing the rider and passenger seats		Remove the parts in the order listed.
1	Passenger seat	1	
2	Rider seat	1	
			For installation, reverse the removal procedure.

FUEL TANK

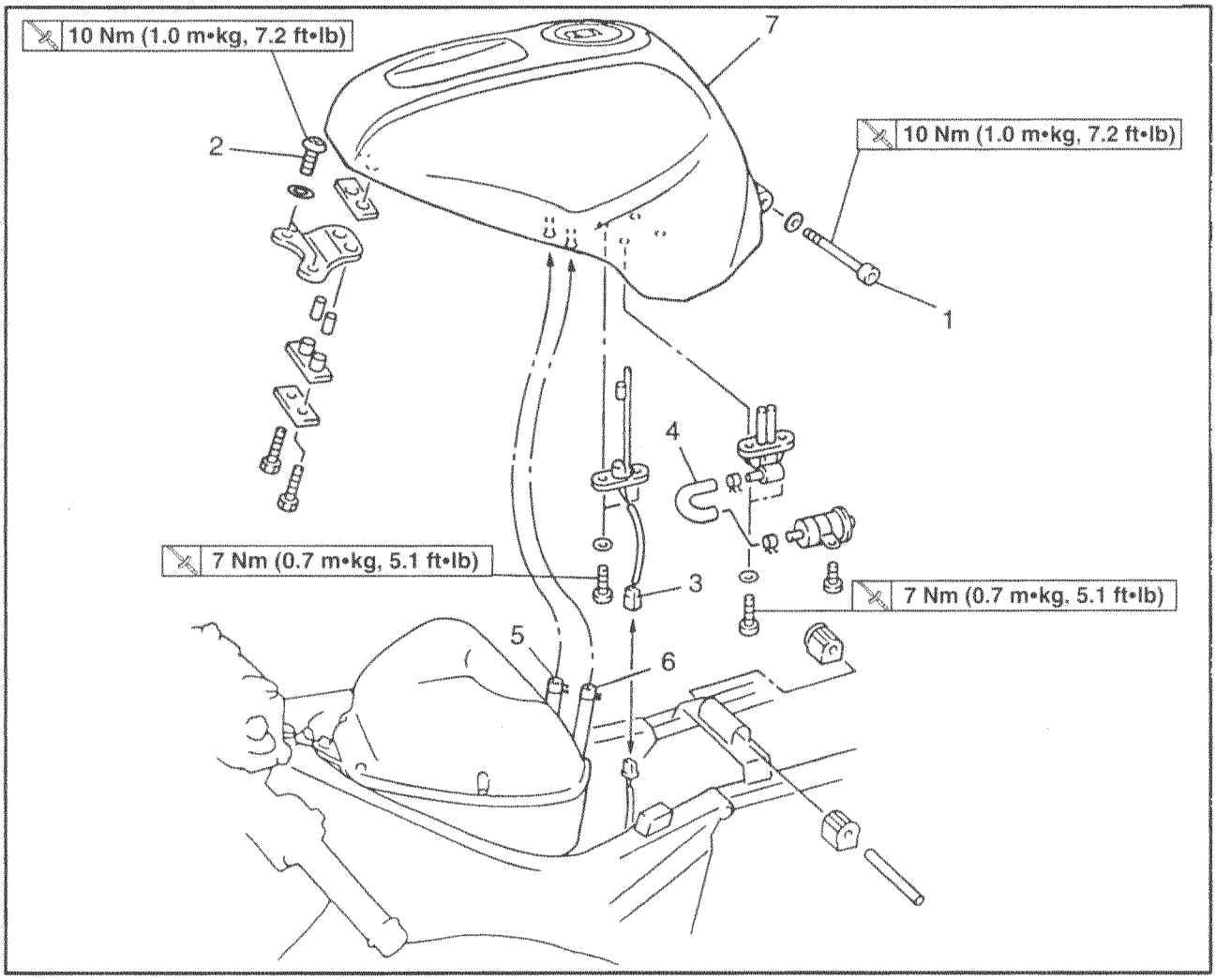

Order	Job/Part	Q'ty	Remarks
	Removing the fuel tank		Remove the parts in the order listed
	Rider seat		Refer to "SEATS".
1	Bolt	1	
2	Bolts	2	
3	Fuel sender coupler	1	Disconnect.
4	Fuel hose	1	**NOTE:** Before disconnecting the fuel hose, set the fuel cock "OFF".
5	Fuel tank overflow hose	1	
6	Fuel tank breather hose	1	
7	Fuel tank	1	For installation reverse the removal procedure.

COWLINGS

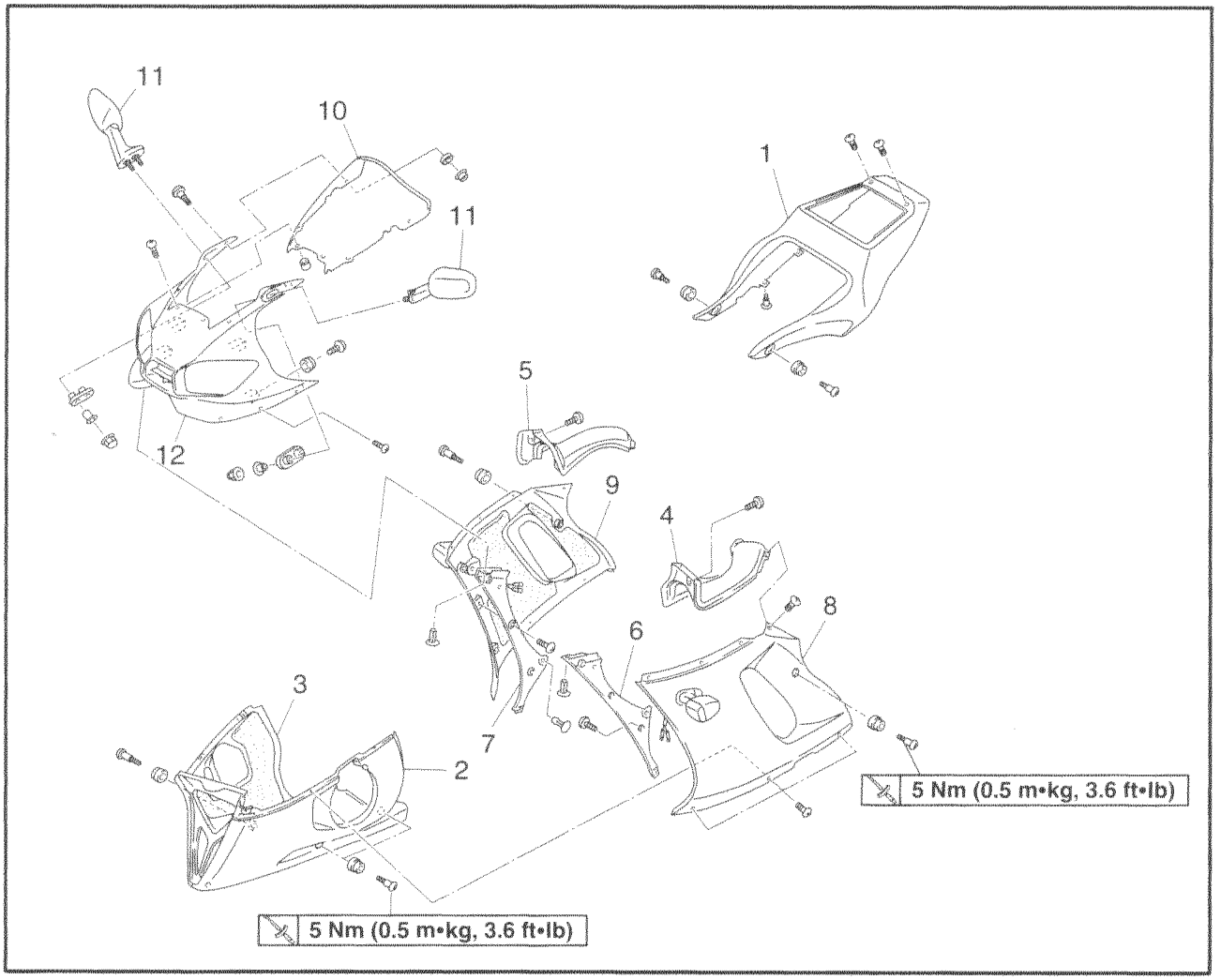

Order	Job/Part	Q'ty	Remarks
	Removing the cowlings		Remove the parts in the order listed
	Rider and passenger seats		Refer to "SEATS".
1	Rear cowling	1	
2	Bottom cowling (left)	1	
3	Bottom cowling (right)	1	
4	Front cowling inner panel (left)	1	
5	Front cowling inner panel (right)	1	
6	Side cowling inner panel (left)	1	
7	Side cowling inner panel (right)	1	

COWLINGS

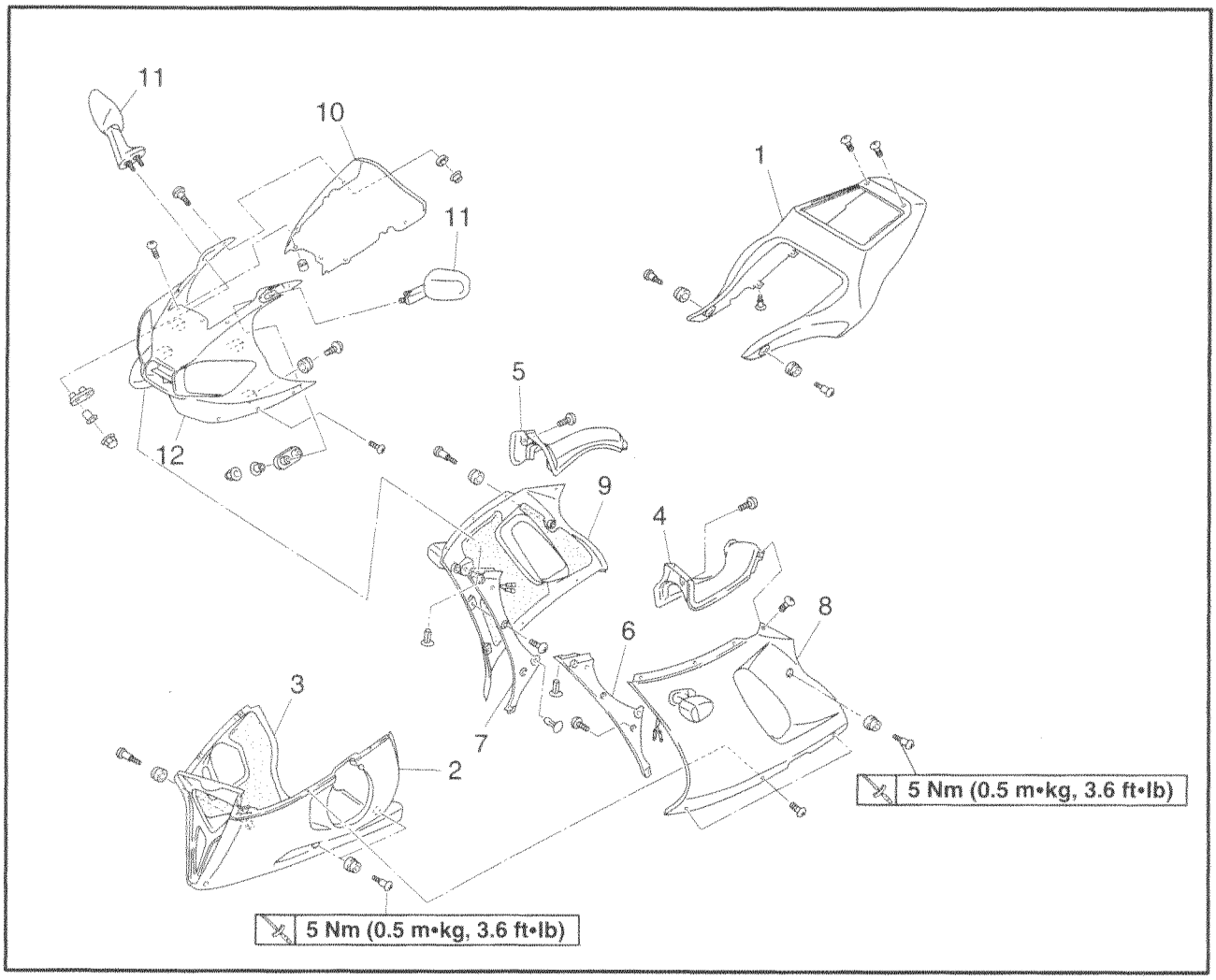

Order	Job/Part	Q'ty	Remarks
8	Left side cowling	1	
9	Right side cowling	1	
10	Windshield	1	
11	Rear view mirror	2	
12	Front cowling	1	
			For installation, reverse the removal procedure.

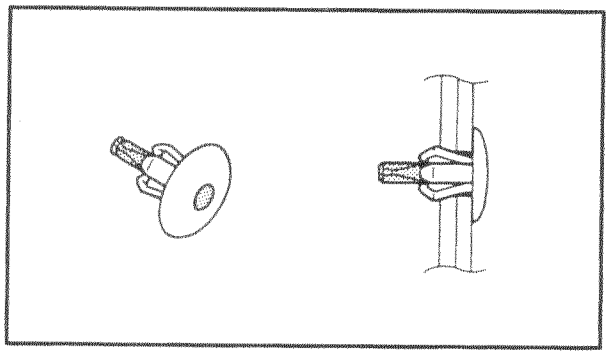

REMOVAL

1. Remove:
   - rear cowling
   - side cowlings

NOTE:

To remove the quick fastener, turn its center to 90° with a screwdriver, then pull the fastener out.

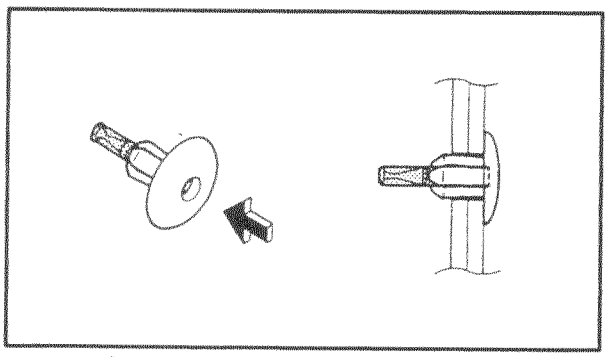

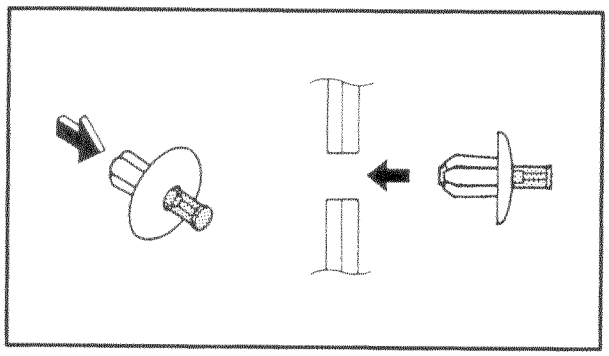

INSTALLATION

1. Install:
   - side cowlings
   - rear cowling

NOTE:

To install the quick fastener, push its pin so that it protrudes from the fastener head, then insert the fastener into the cowling and push the pin ⓐ in with a screwdriver. Make sure that the pin is flush with the fastener's head.

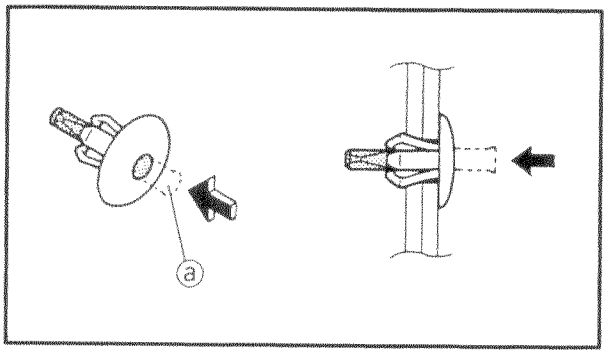

AIR FILTER CASE AND IGNITION COILS

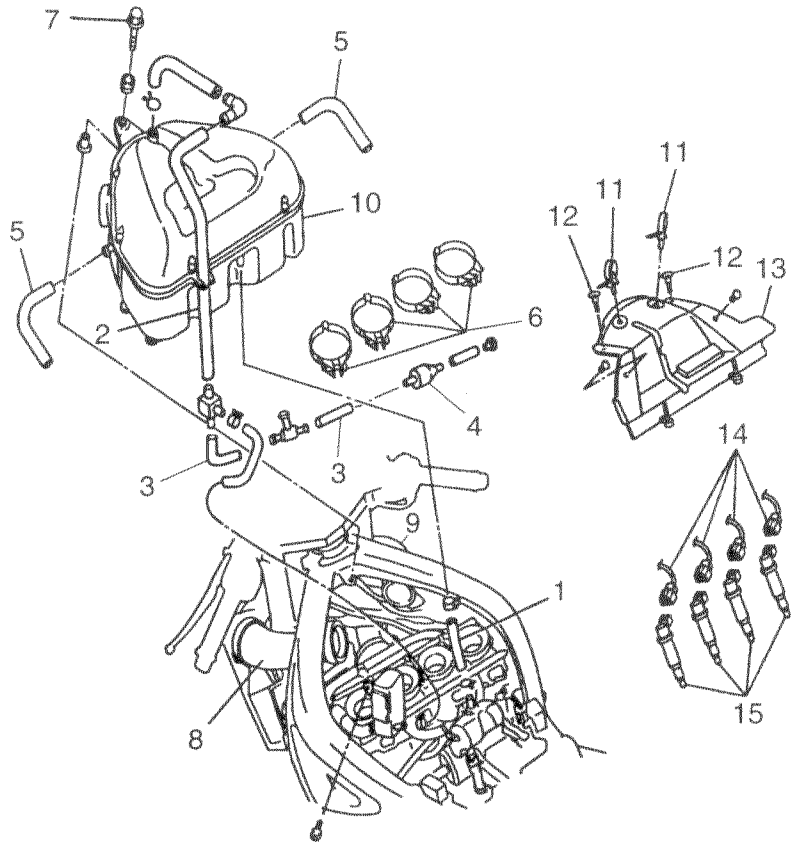

Order	Job/Part	Q'ty	Remarks
	Removing the air filter case and ignition coils		Remove the parts in the order listed.
	Rider seat and fuel tank		Refer to "SEATS" and "FUEL TANK".
	Front cowling inner panel (left)		Refer to "COWLINGS".
	Front cowling inner panel (right)		
1	Crankcase breather hose	1	
2	Air vent hose	1	
3	Hoses	2	
4	Drain cup	1	
5	Air filter case balance hose	2	
6	Clamp screw	4	Loosen.
7	Bolt	1	
8	Surge tank joint (left)	1	
9	Surge tank joint (right)	1	
10	Air filter case	1	
11	Clamp	2	
12	Quick fastener	2	

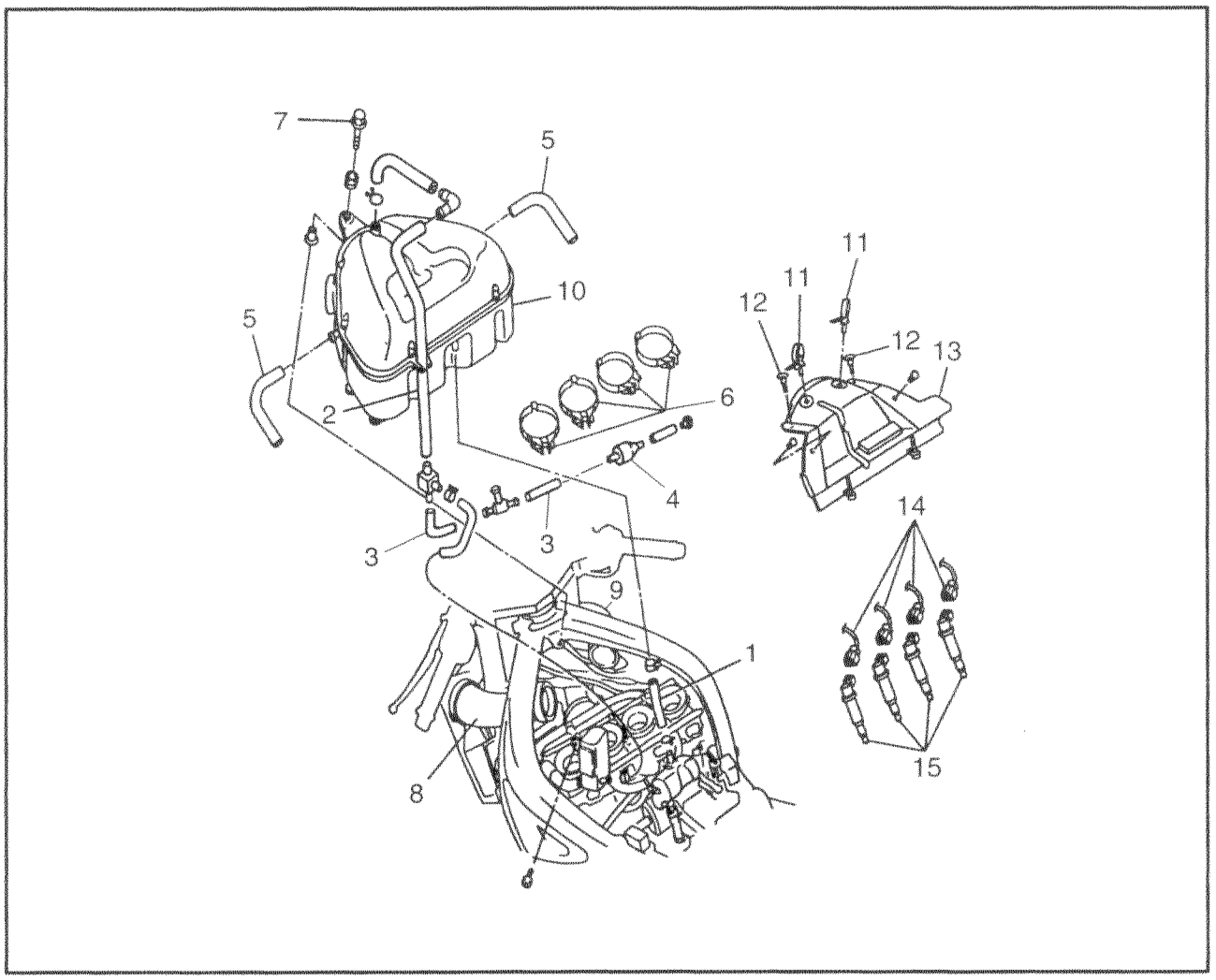

Order	Job/Part	Q'ty	Remarks
13	Heat protector plate	1	
14	Ignition coil coupler	4	
15	Ignition coil	4	
			For installation, reverse the removal procedure.

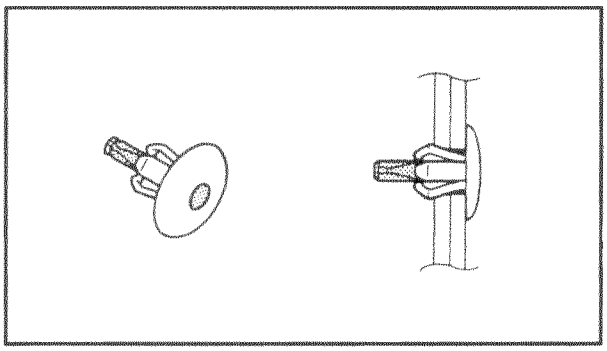

REMOVAL

1. Remove:
   - heat protector plate

NOTE:

To remove the quick fastener, push its center in with a screwdriver, then pull the fastener out.

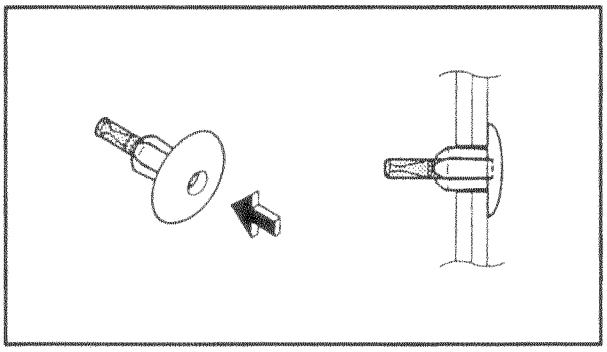

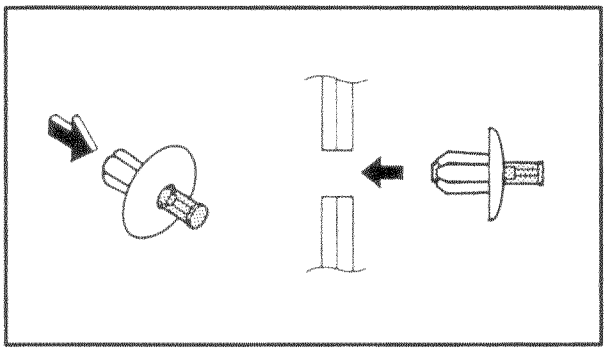

INSTALLATION

1. Install:
   - heat protector plate

NOTE:

To install the quick fastener, push its pin so that it protrudes from the fastener head, then insert the fastener into the rubber baffle and push the pin ⓐ in with a screwdriver. Make sure that the pin is flush with the fastener's head.

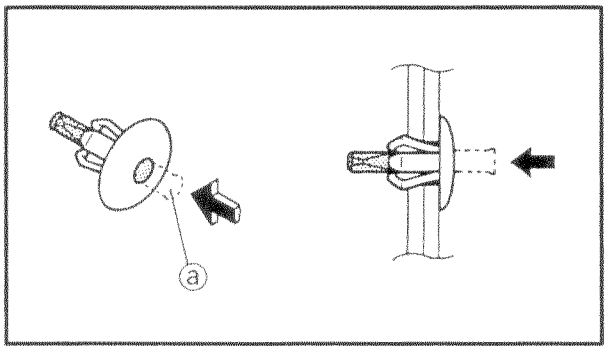

EB303001

ENGINE

ADJUSTING THE VALVE CLEARANCE

The following procedure applies to all of the valves.

NOTE:

- Valve clearance adjustment should be made on a cold engine, at room temperature.
- When the valve clearance is to be measured or adjusted, the piston must be at top dead center (TDC) on the compression stroke.

1. Remove:
   - rider seat
   - fuel tank
     Refer to "SEATS" and "FUEL TANK".
   - air filter case
   - heat protector plate
     Refer to "AIR FILTER CASE AND IGNITION COILS".
   - bottom cowling
   - side cowlings
     Refer to "COWLINGS".
   - carburetor assembly
     Refer to "CARBURETORS" in chapter 6.
   - radiator assembly
     Refer to "RADIATOR" in chapter 5.

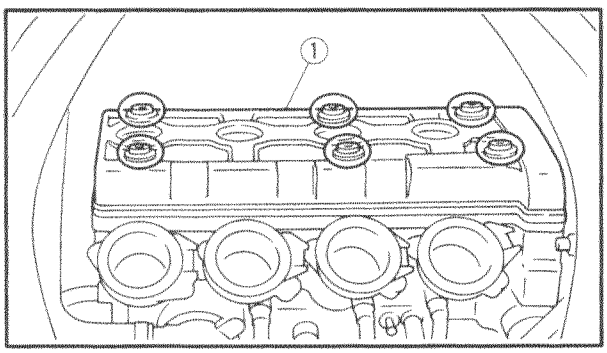

2. Remove:
   - ignition coils
   - spark plugs
   - cylinder head cover ①
   - cylinder head cover gasket

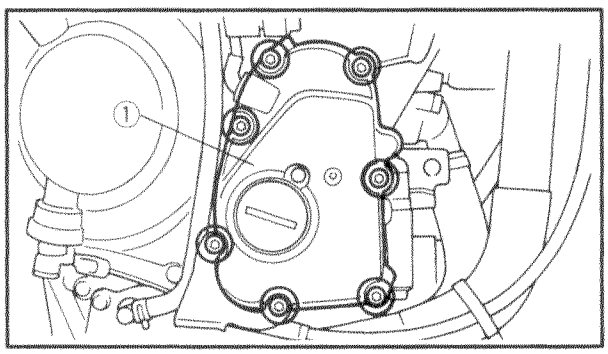

3. Remove:
   - pickup coil rotor cover ①

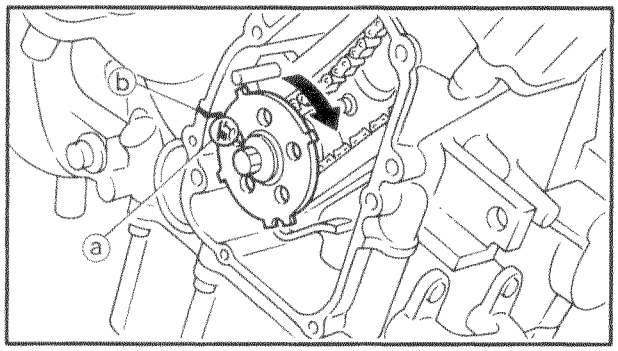

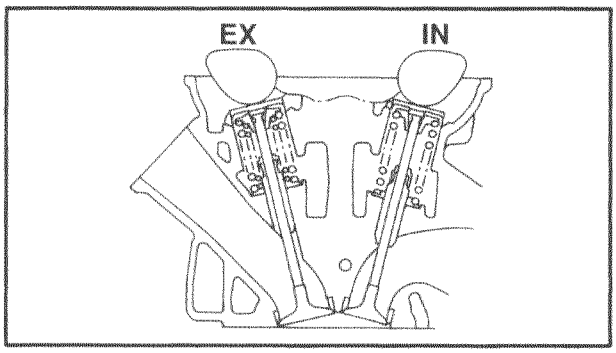

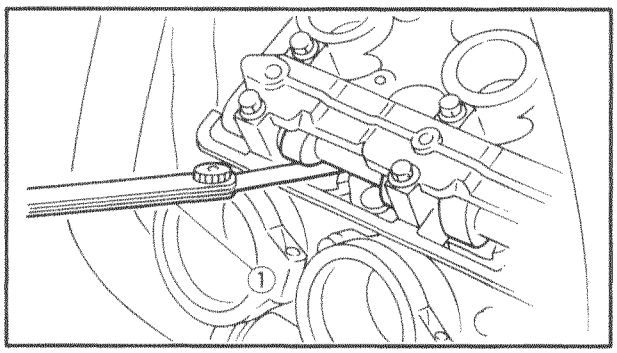

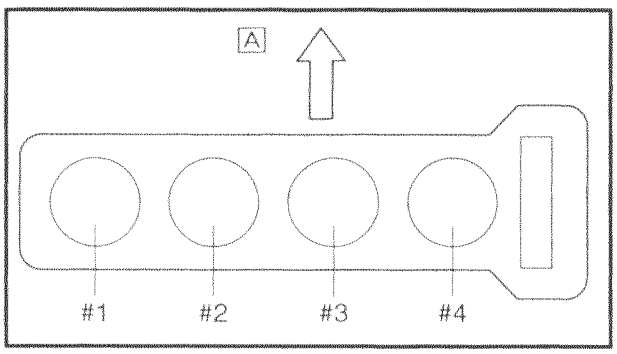

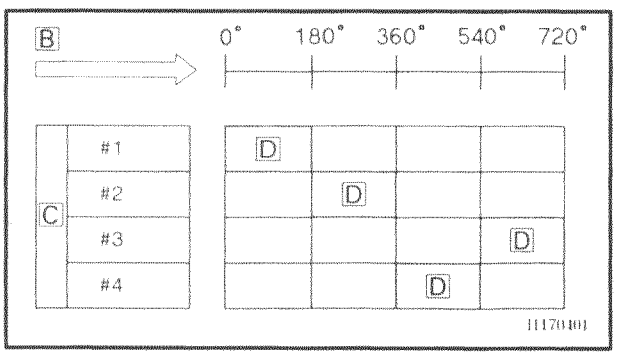

4. Measure:
   - valve clearance
     Out of specification → Adjust

Valve clearance (cold)
Intake valve
0.11 ~ 0.20 mm
(0.0043 ~ 0.0079 in)
Exhaust valve
0.21 ~ 0.30 mm
(0.0083 ~ 0.0118in)

a. Turn the crankshaft clockwise.
b. When piston #1 is at TDC on the compression stroke, align the TDC mark ⓐ on the pickup coil rotor with the crankcase mating surface ⓑ.

NOTE:
TDC on the compression stroke can be found when the camshaft lobes are turned away from each other.

c. Measure the valve clearance with a thickness gauge ①.

NOTE:
- If the valve clearance is incorrect, record the measured reading.
- Measure the valve clearance in the following sequence.

Valve clearance measuring sequence
Cylinder #1 → #2 → #4 → #3

A Front
d. To measure the valve clearances of the other cylinders, starting with cylinder #1 at TDC, turn the crankshaft counterclockwise as specified in the following table.
B Degrees that the crankshaft is turned counterclockwise
C Cylinder
D Combustion cycle

Cylinder #2	**180°**
Cylinder #4	**360°**
Cylinder #3	**540°**

5. Remove:
   - timing chain tensioner
   - timing chain guide (exhaust side)
   - camshaft cap
   - timing chain (from the camshaft sprockets)
   - intake camshaft
   - exhaust camshaft

NOTE:
- Refer to "CAMSHAFTS" in chapter 4.
- When removing the timing chain from camshafts, fasten the timing chain with a wire to retrieve it if it falls into the crankcase.

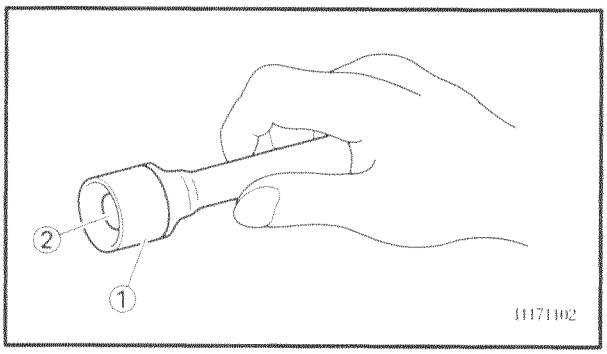

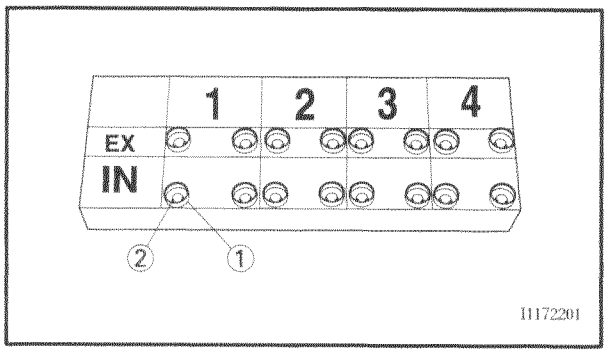

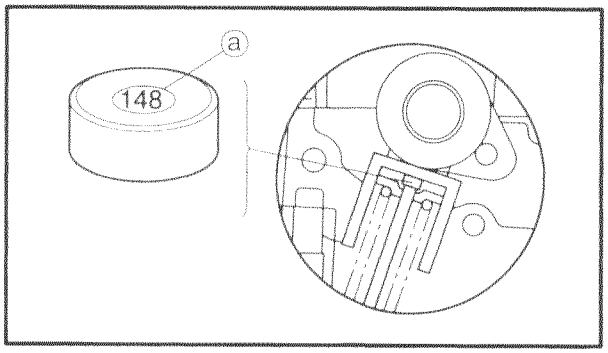

6. Adjust:
   - valve clearance

a. Remove the valve lifter ① and the valve pad ②.

NOTE:
- Cover the timing chain opening with a rag to prevent the valve pad from falling into the crankcase.
- Make a note of the position of each valve lifter ① and valve pad ② so that they can be installed in the correct place.

b. Select the proper valve pad from the following table.

Valve pad thickness range		Available valve pads
Nos. 120 ~ 240	1.20 ~ 2.40 mm	25 thicknesses in 0.05 mm increments

NOTE:
- The thickness ⓐ of each valve pad is marked in hundredths of millimeters on the side that touches the valve lifter.
- Since valve pads of various sizes are originally installed, the valve pad number must be rounded in order to reach the closest equivalent to the original.

c. Round off the original valve pad number according to the following table.

Last digit	Rounded value
0 or 2	0
5	5
8	10

EXAMPLE:
Original valve pad number = 148 (thickness = 1.48 mm)
Rounded value = 150

d. Locate the rounded number of the original valve pad and the measured valve clearance in the valve pad selection table. The point where the column and row intersect is the new valve pad number.

NOTE:
The new valve pad number is only an approximation. The valve clearance must be measured again and the above steps should be repeated if the measurement is still incorrect.

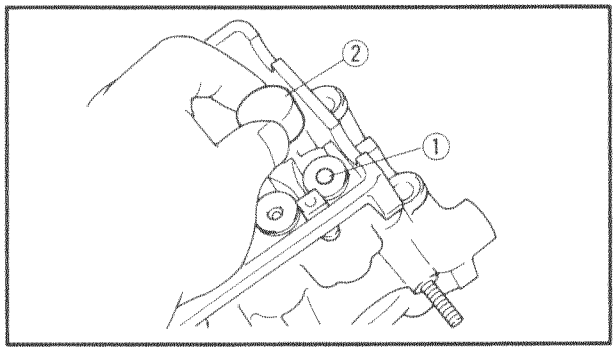

e. Install the new valve pad ① and the valve lifter ②.

NOTE:
- Lubricate the valve pad with molybdenum disulfide grease.
- Lubricate the valve lifter with molybdenum disulfide oil.
- The valve lifter must turn smoothly when rotated by hand.
- Install the valve lifter and the valve pad in the correct place.

f. Install the exhaust and intake camshafts, timing chain and camshaft caps.

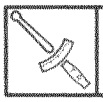	**Camshaft cap bolt** **10 Nm (1.0 m•kg, 7.2 ft•lb)**

NOTE:
- Refer to "CAMSHAFTS" in chapter 4.
- Lubricate the camshaft lobes and camshaft journals.
- First, install the exhaust camshaft.
- Align the camshaft marks with the camshaft cap marks.
- Turn the crankshaft counterclockwise several full turns to seat the parts.

VALVE PAD SELECTION TABLE

INTAKE

B MEASURED VALVE CLEARANCE	A ORIGINAL VALVE PAD NUMBER																								
	120	125	130	135	140	145	150	155	160	165	170	175	180	185	190	195	200	205	210	215	220	225	230	235	240
0.00 ~ 0.02				120	125	130	135	140	145	150	155	160	165	170	175	180	185	190	195	200	205	210	215	220	225
0.03 ~ 0.07			120	125	130	135	140	145	150	155	160	165	170	175	180	185	190	195	200	205	210	215	220	225	230
0.08 ~ 0.10		120	125	130	135	140	145	150	155	160	165	170	175	180	185	190	195	200	205	210	215	220	225	230	235
0.11 ~ 0.20	C STANDARD CLEARANCE																								
0.21 ~ 0.22	125	130	135	140	145	150	155	160	165	170	175	180	185	190	195	200	205	210	215	220	225	230	235	240	
0.23 ~ 0.27	130	135	140	145	150	155	160	165	170	175	180	185	190	195	200	205	210	215	220	225	230	235	240		
0.28 ~ 0.32	135	140	145	150	155	160	165	170	175	180	185	190	195	200	205	210	215	220	225	230	235	240			
0.33 ~ 0.37	140	145	150	155	160	165	170	175	180	185	190	195	200	205	210	215	220	225	230	235	240				
0.38 ~ 0.42	145	150	155	160	165	170	175	180	185	190	195	200	205	210	215	220	225	230	235	240					
0.43 ~ 0.47	150	155	160	165	170	175	180	185	190	195	200	205	210	215	220	225	230	235	240						
0.48 ~ 0.52	155	160	165	170	175	180	185	190	195	200	205	210	215	220	225	230	235	240							
0.53 ~ 0.57	160	165	170	175	180	185	190	195	200	205	210	215	220	225	230	235	240								
0.58 ~ 0.62	165	170	175	180	185	190	195	200	205	210	215	220	225	230	235	240									
0.63 ~ 0.67	170	175	180	185	190	195	200	205	210	215	220	225	230	235	240										
0.68 ~ 0.72	175	180	185	190	195	200	205	210	215	220	225	230	235	240											
0.73 ~ 0.77	180	185	190	195	200	205	210	215	220	225	230	235	240												
0.78 ~ 0.82	185	190	195	200	205	210	215	220	225	230	235	240													
0.83 ~ 0.87	190	195	200	205	210	215	220	225	230	235	240														
0.88 ~ 0.92	195	200	205	210	215	220	225	230	235	240															
0.93 ~ 0.97	200	205	210	215	220	225	230	235	240																
0.98 ~ 1.02	205	210	215	220	225	230	235	240																	
1.03 ~ 1.07	210	215	220	225	230	235	240																		
1.08 ~ 1.12	215	220	225	230	235	240																			
1.13 ~ 1.17	220	225	230	235	240																				
1.18 ~ 1.22	225	230	235	240																					
1.23 ~ 1.27	230	235	240																						
1.28 ~ 1.32	235	240																							
1.33 ~ 1.37	240																								

Example:
Valve Clearance (cold)
0.11 ~ 0.20 mm
Rounded value 150
Measured valve clearance is 0.24 mm
Replace pad 150 with pad 160
Pad No. 150 = 1.50 mm
Pad No. 160 = 1.60 mm
Always install the valve pad with the number facing down.

EXHAUST

B MEASURED VALVE CLEARANCE	A ORIGINAL VALVE PAD NUMBER																								
	120	125	130	135	140	145	150	155	160	165	170	175	180	185	190	195	200	205	210	215	220	225	230	235	240
0.00 ~ 0.02						120	125	130	135	140	145	150	155	160	165	170	175	180	185	190	195	200	205	210	215
0.03 ~ 0.07					120	125	130	135	140	145	150	155	160	165	170	175	180	185	190	195	200	205	210	215	220
0.08 ~ 0.12				120	125	130	135	140	145	150	155	160	165	170	175	180	185	190	195	200	205	210	215	220	225
0.13 ~ 0.17			120	125	130	135	140	145	150	155	160	165	170	175	180	185	190	195	200	205	210	215	220	225	230
0.18 ~ 0.20		120	125	130	135	140	145	150	155	160	165	170	175	180	185	190	195	200	205	210	215	220	225	230	235
0.21 ~ 0.30	C STANDARD CLEARANCE																								
0.31 ~ 0.32	125	130	135	140	145	150	155	160	165	170	175	180	185	190	195	200	205	210	215	220	225	230	235	240	
0.33 ~ 0.37	130	135	140	145	150	155	160	165	170	175	180	185	190	195	200	205	210	215	220	225	230	235	240		
0.38 ~ 0.42	135	140	145	150	155	160	165	170	175	180	185	190	195	200	205	210	215	220	225	230	235	240			
0.43 ~ 0.47	140	145	150	155	160	165	170	175	180	185	190	195	200	205	210	215	220	225	230	235	240				
0.48 ~ 0.52	145	150	155	160	165	170	175	180	185	190	195	200	205	210	215	220	225	230	235	240					
0.53 ~ 0.57	150	155	160	165	170	175	180	185	190	195	200	205	210	215	220	225	230	235	240						
0.58 ~ 0.62	155	160	165	170	175	180	185	190	195	200	205	210	215	220	225	230	235	240							
0.63 ~ 0.67	160	165	170	175	180	185	190	195	200	205	210	215	220	225	230	235	240								
0.68 ~ 0.72	165	170	175	180	185	190	195	200	205	210	215	220	225	230	235	240									
0.73 ~ 0.77	170	175	180	185	190	195	200	205	210	215	220	225	230	235	240										
0.78 ~ 0.82	175	180	185	190	195	200	205	210	215	220	225	230	235	240											
0.83 ~ 0.87	180	185	190	195	200	205	210	215	220	225	230	235	240												
0.88 ~ 0.92	185	190	195	200	205	210	215	220	225	230	235	240													
0.93 ~ 0.97	190	195	200	205	210	215	220	225	230	235	240														
0.98 ~ 1.02	195	200	205	210	215	220	225	230	235	240															
1.03 ~ 1.07	200	205	210	215	220	225	230	235	240																
1.08 ~ 1.12	205	210	215	220	225	230	235	240																	
1.13 ~ 1.17	210	215	220	225	230	235	240																		
1.18 ~ 1.22	215	220	225	230	235	240																			
1.23 ~ 1.27	220	225	230	235	240																				
1.28 ~ 1.32	225	230	235	240																					
1.33 ~ 1.37	230	235	240																						
1.38 ~ 1.42	235	240																							
1.43 ~ 1.47	240																								

Example:
Valve Clearance (cold)
0.21 ~ 0.30 mm
Rounded value 175
Measured valve clearance is 0.35 mm
Replace pad 150 with pad 185
Pad No. 175 = 1.75 mm
Pad No. 185 = 1.85 mm
Always install the valve pad with the number facing down.

g. Measure the valve clearance again.
h. If the valve clearance is still out of specification, repeat all of the valve clearance adjustment steps until the specified clearance is obtained.

▲▲▲

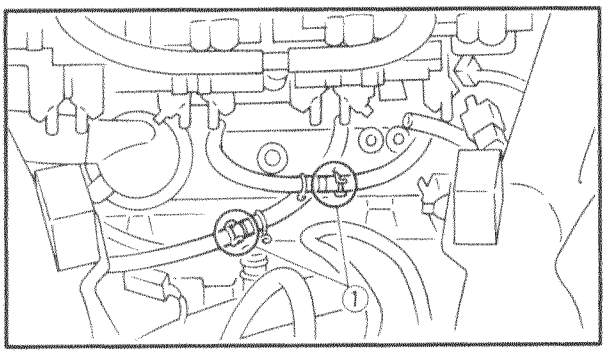

3. Remove:
   - hose ①

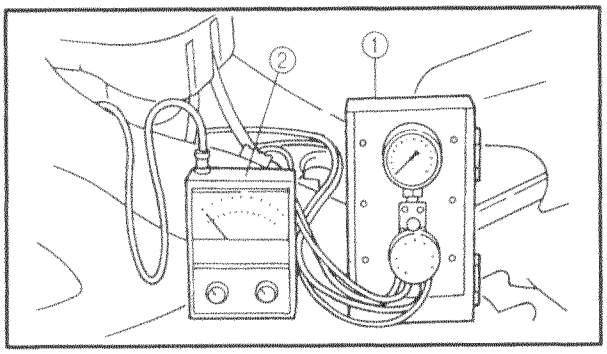

4. Install:
   - vacuum gauge attachments (into the bolt holes)
   - vacuum gauge ① (onto the vacuum gauge attachments)
   - engine tachometer ② (onto the ignition coil of cylinder #1)

Vacuum gauge
90890-03094, YU-08030-A
Vacuum gauge attachment
90890-03060
Engine tachometer
90793-80009

5. Start the engine and let it warm up for several minutes.

6. Measure:
   - engine idling speed
     Out of specification → Adjust.
     Refer to "ADJUSTING THE ENGINE IDLING SPEED".

Engine idling speed
1,250 ~ 1,350 r/min

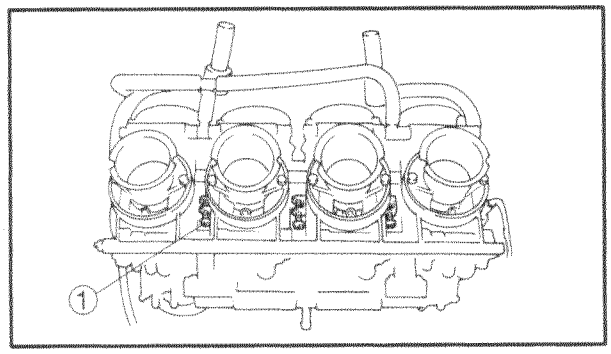

7. Adjust:
   - carburetor synchronization

▼▼▼▼▼▼▼▼▼▼▼▼▼▼▼▼▼▼▼▼▼▼▼▼▼▼▼▼▼▼▼▼▼▼

a. Synchronize carburetor #1 to carburetor #2 by turning the synchronizing screw ① in either direction until both gauges read the same.

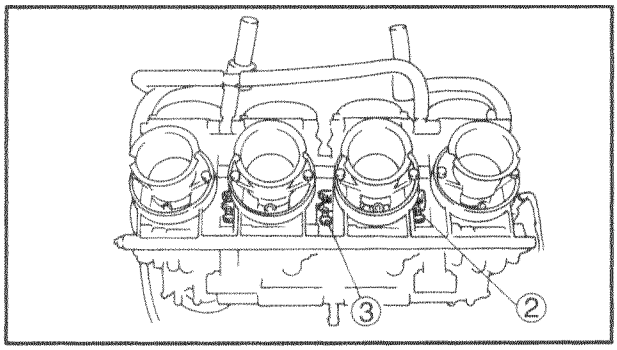

NOTE:

After each step, rev the engine two or three times, each time for less than a second, and check the synchronization again.

b. Synchronize carburetor #4 to carburetor #3 by turning the synchronizing screw ② in either direction until both gauges read the same.
c. Synchronize carburetor #2 to carburetor #3 by turning the synchronizing screw ③ in either direction until both gauges read the same.

Vacuum pressure at engine idling speed
24.0 kPa (0.24 kg/cm^2, 3.41 psi)

NOTE:

The difference in vacuum pressure between two carburetors should not exceed 1.33 kPa (10 mm Hg).

▲▲▲▲▲▲▲▲▲▲▲▲▲▲▲▲▲▲▲▲▲▲▲▲▲▲▲▲▲▲▲▲

8. Measure:
   - engine idling speed
     Out of specification → Adjust.
9. Stop the engine and remove the measuring equipment.
10. Adjust:
    - throttle cable free play
      Refer to "ADJUSTING THE THROTTLE CABLE FREE PLAY".

Throttle cable free play
(at the flange of the throttle grip)
6 ~ 8 mm (0.24 ~ 0.31 in)

EB303020

ADJUSTING THE ENGINE IDLING SPEED

NOTE:

Prior to adjusting the engine idling speed, the carburetor synchronization should be adjusted properly, the air filter element should be clean, and the engine should have adequate compression.

1. Start the engine and let it warm up for several minutes.

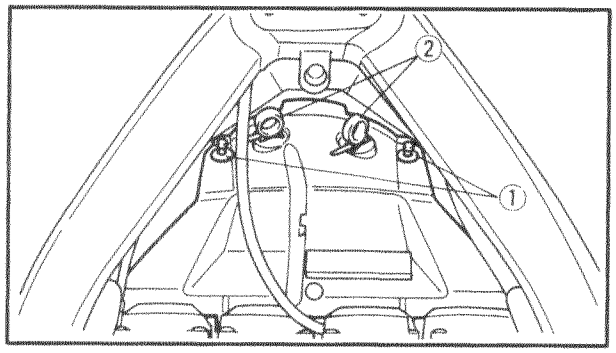

2. Remove:
   - air filter case
   - quick fasteners ①
   - band ②

   Refer to "AIR FILTER CASE AND IGNITION COILS".

3. Install:
   - engine tachometer (onto the ignition coil of cylinder #1)

	Engine tachometer **90793-80009**

4. Install:
   - air filter case

   Refer to "AIR FILTER CASE AND IGNITION COILS".
5. Measure:
   - engine idling speed

   Out of specification → Adjust.

	Engine idling speed **1,250 ~ 1,350 r/min**

6. Adjust:
   - engine idling speed

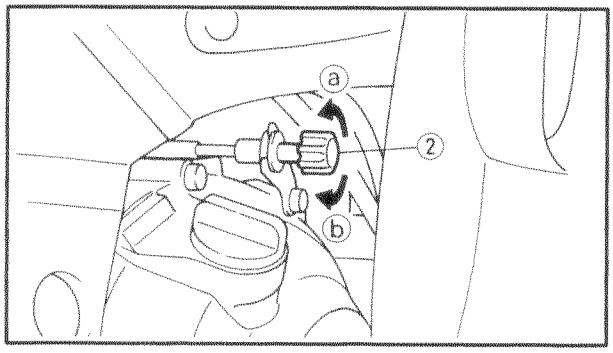

▼▼▼▼▼▼▼▼▼▼▼▼▼▼▼▼▼▼▼▼▼▼▼▼▼▼▼▼▼▼▼▼

a. Turn the throttle stop screw ② in direction ⓐ or ⓑ until the specified engine idling speed is obtained.

Direction ⓐ	**Engine idling speed is decreased.**
Direction ⓑ	**Engine idling speed is increased.**

▲▲▲▲▲▲▲▲▲▲▲▲▲▲▲▲▲▲▲▲▲▲▲▲▲▲▲▲▲▲▲▲

7. Adjust:
   - throttle cable free play
     Refer to "ADJUSTING THE THROTTLE CABLE FREE PLAY".

Throttle cable free play
(at the flange of the throttle grip)
6 ~ 8 mm (0.24 ~ 0.31 in)

EB303031

ADJUSTING THE THROTTLE CABLE FREE PLAY

NOTE:

Prior to adjusting the throttle cable free play, the engine idling speed and carburetor synchronization should be adjusted properly.

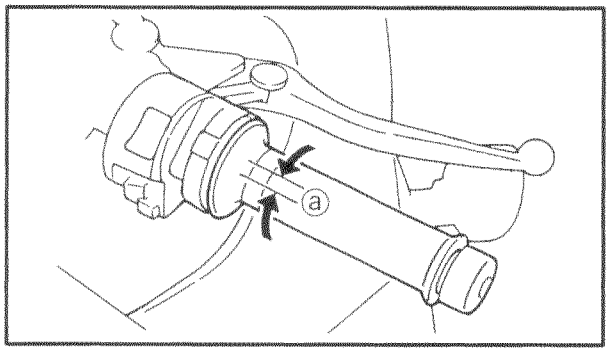

1. Measure:
   - throttle cable free play ⓐ
     Out of specification → Adjust.

Throttle cable free play
(at the flange of the throttle grip)
6 ~ 8 mm (0.24 ~ 0.31 in)

2. Remove:
   - rider seat
   - fuel tank
     Refer to "SEATS" and "FUEL TANK".
   - air filter case
   - heat protector plate
     Refer to "AIR FILTER CASE AND IGNITION COILS".

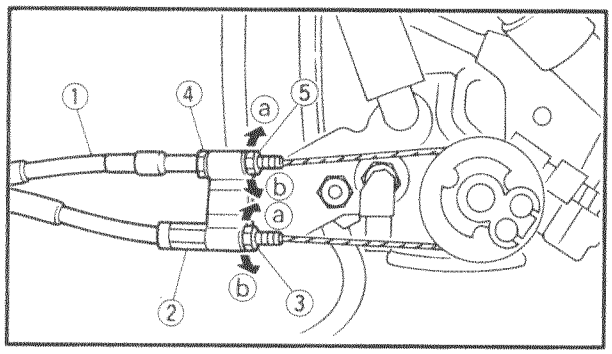

3. Adjust:
   - throttle cable free play

NOTE:

When the throttle is opened, the accelerator cable ① is pulled.

Carburetor side

a. Loosen the locknut ② on the decelerator cable.
b. Turn the adjusting nut ③ in direction ⓐ or ⓑ to take up any slack on the decelerator cable.
c. Loosen the locknut ④ on the accelerator cable.
d. Turn the adjusting nut ⑤ in direction ⓐ or ⓑ until the specified throttle cable free play is obtained.

Direction ⓐ	**Throttle cable free play in increased.**
Direction ⓑ	**Throttle cable free play is decreased.**

e. Tighten the locknuts.

NOTE:

If the specified throttle cable free play cannot be obtained on the carburetor side of the cable, use the adjusting nut on the handlebar side.

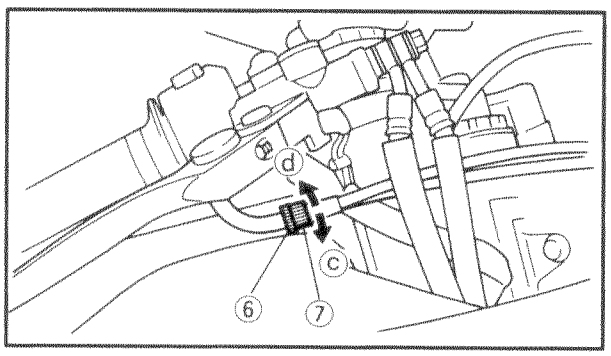

Handlebar side

a. Loosen the locknut ⑥.
b. Turn the adjusting nut ⑦ in direction ⓒ or ⓓ until the specified throttle cable free play is obtained.

Direction ⓒ	**Throttle cable free play is increased.**
Direction ⓓ	**Throttle cable free play is decreased.**

d. Tighten the locknut.

⚠ WARNING

After adjusting the throttle cable free play, start the engine and turn the handlebars to the right and to the left to ensure that this does not cause the engine idling speed to change.

EB303040

CHECKING THE SPARK PLUGS

The following procedure applies to all of the spark plugs.

1. Remove:
   - rider seat
   - fuel tank
     Refer to "SEATS" and "FUEL TANK".
   - air filter case
   - heat protector plate
     Refer to "AIR FILTER CASE AND IGNITION COILS".
2. Disconnect:
   - Ignition coils
3. Remove:
   - spark plug

NOTE:

a. Remove the coupler.
b. Turn the coil counterdockwise. (5 to 6 turns would be adequate.)
c. Pull out the coil upward.
   Never pry the coupler with a screw driver.
d. Press the coil in the plug hole by hand as fa-ras it will go.
e. Turn the coil clockwise and screw it in, 5 to 6 turns would be adequate.
f. Reins tall the coupler.
   Do not strike on the coil with a hammer or the like.

CAUTION:

Before removing the spark plugs, blow away any dirt accumulated in the spark plug wells with compressed air to prevent it from falling into the cylinders.

4. Check:
   - spark plug type
     Incorrect → Change.

Spark plugs
type (manufacturer)
CR10EK (NGK)
CR9EK (NGK) (California)

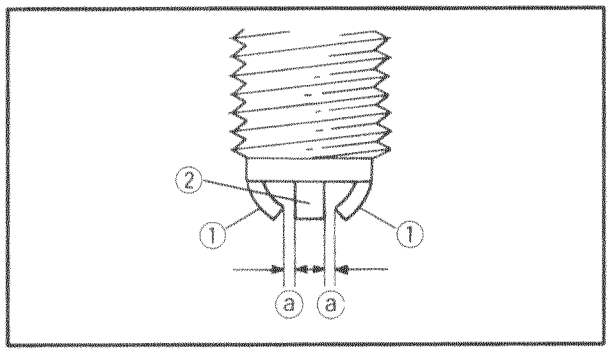

5. Check:
   - electrodes ①
     Damage/wear → Replace the spark plug.
   - insulator ②
     Abnormal color → Replace the spark plug.
     Normal color is medium-to-light tan.
6. Clean:
   - spark plug
     (with a spark plug cleaner or wire brush)
7. Measure:
   - spark plug gap ⓐ
     (with a wire gauge)
     Out of specification → Regap.

Spark plug gap
0.6 ~ 0.7 mm (0.02 ~ 0.03 in)

8. Install:
   - spark plug — **13 Nm (1.3 m•kg, 9.4 ft•lb)**

NOTE:

Before installing the spark plug, clean the spark plug and gasket surface.

EB303050

CHECKING THE IGNITION TIMING

NOTE:

Prior to checking the ignition timing, check the wiring connections of the entire ignition system. Make sure that all connections are tight and free of corrosion.

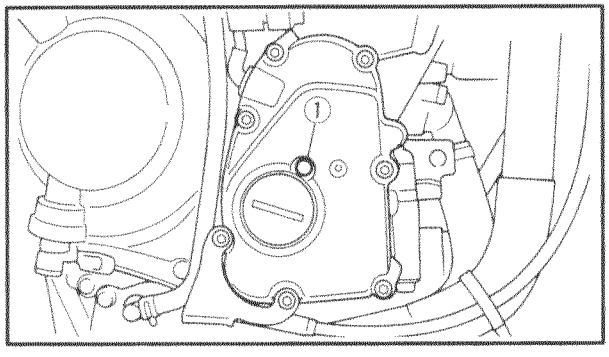

1. Remove:
   - bottom cowling
     Refer to "COWLINGS".
   - rider seat
   - fuel tank
     Refer to "SEATS" and "FUEL TANK".
   - air filter case
     Refer to "AIR FILTER CASE AND IGNITION COILS".
   - timing mark accessing screw ①

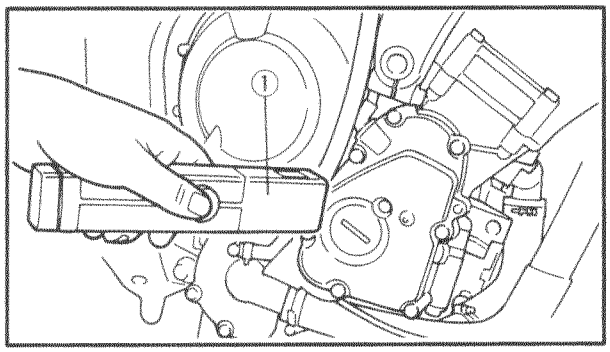

2. Install:
   - timing light ①
   - engine tachometer
     (onto the ignition coil of cylinder #1)

	Timing light **90890-03141, YU-33277-A** **Engine tachometer** **90793-80009**

3. Check:
   - ignition timing

▼▼▼▼▼▼▼▼▼▼▼▼▼▼▼▼▼▼▼▼▼▼▼▼▼▼▼▼▼▼▼▼▼▼

a. Start the engine, warm it up for several minutes, and then let it run at the specified engine idling speed.

	Engine idling speed **1,250 ~ 1,350 r/min**

b. Check that the mark ⓐ is within the required firing range ⓑ on the pickup coil rotor.
   Incorrect firing range → Check the ignition system.

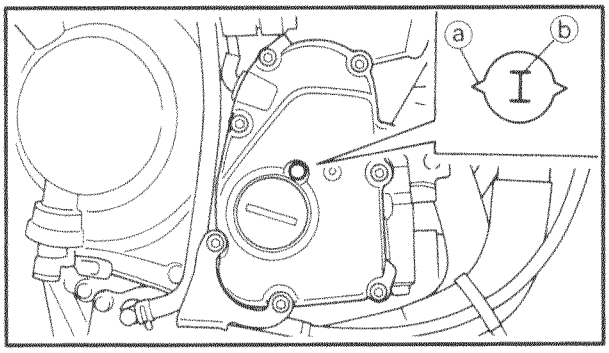

NOTE:

The ignition timing is not adjustable.

▲▲▲▲▲▲▲▲▲▲▲▲▲▲▲▲▲▲▲▲▲▲▲▲▲▲▲▲▲▲▲▲▲▲

EB303060

MEASURING THE COMPRESSION PRESSURE

The following procedure applies to all of the cylinders.

NOTE:

Insufficient compression pressure will result in a loss of performance.

1. Measure:
   - valve clearance
     Out of specification → Adjust.
     Refer to "ADJUSTING THE VALVE CLEARANCE".
2. Start the engine, warm it up for several minutes, and then stop it.
3. Remove:
   - rider seat
   - fuel tank
     Refer to "SEATS" and "FUEL TANK".
   - air filter case
   - heat protector plate
   - ignition coils
     Refer to "AIR FILTER CASE AND IGNITION COILS".

4. Remove:
   - spark plug

CAUTION:

Before removing the spark plugs, use compressed air to blow away any dirt accumulated in the spark plug wells to prevent it from falling into the cylinders.

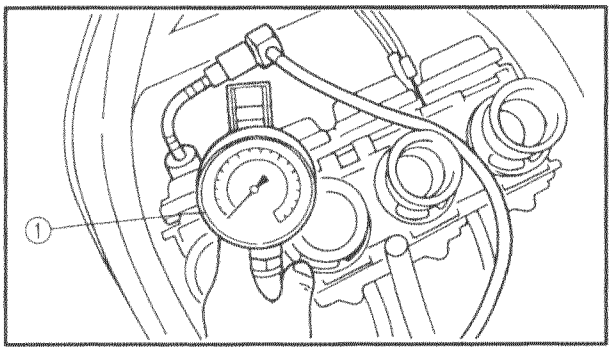

5. Install:
   - compression gauge ①

	Compression gauge **90890-03081, YU-33223** **Adapter** **90890-04136**

6. Measure:
   - compression pressure
     Out of specification → Refer to steps (c) and (d).

	Compression pressure (at sea level) **Minimum** **1300 kPa (13.0 kg/cm^2, 184.90 psi)** **Standard** **1550 kPa (15.5 kg/cm^2, 224.75 psi)** **Maximum** **1600 kPa (16.0 kg/cm^2, 227.57 psi)**

▼▼▼▼▼▼▼▼▼▼▼▼▼▼▼▼▼▼▼▼▼▼▼▼▼▼▼▼▼▼▼▼▼▼

a. Set the main switch to "ON".
b. With the throttle wide open, crank the engine until the reading on the compression gauge stabilizes.

WARNING

To prevent sparking, ground all spark plug leads before cranking the engine.

NOTE:

The difference in compression pressure between cylinders should not exceed 100 kPa (1 kg/cm^2, 14.22 psi).

c. If the compression pressure is above the maximum specification, check the cylinder head, valve surfaces, and piston crown for carbon deposits.
   Carbon deposits → Eliminate.
d. If the compression pressure is below the minimum specification, squirt a few drops of oil into the cylinder and measure again.

Refer to the following table.

Compression pressure (with oil applied into the cylinder)	
Reading	**Diagnosis**
Higher than without oil	**Piston wear or damage → Repair.**
Same as without oil	**Piston ring(-s), valve(-s), cylinder head gasket or piston possibly defective → Repair.**

7. Install:
   • spark plug — **13 Nm (1.3 m•kg, 9.4 ft•lb)**

EB303070

CHECKING THE ENGINE OIL LEVEL

1. Stand the motorcycle on a level surface.

NOTE:
• Place the motorcycle on a suitable stand.
• Make sure that the motorcycle is upright.

2. Start the engine, let it idle for several minutes, and then stop it.

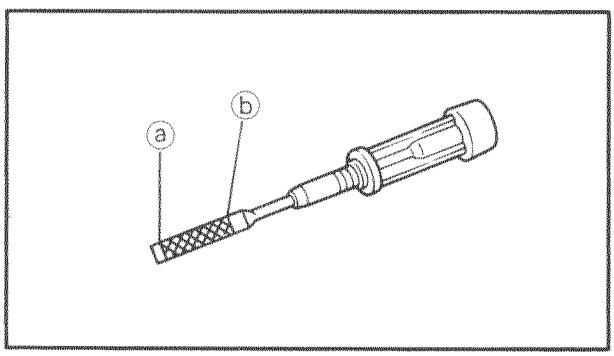

3. Check:
   • engine oil level
   The engine oil level should be between the minimum level mark ⓐ and maximum level mark ⓑ.
   Below the minimum level mark → Add the recommended engine oil to the proper level.

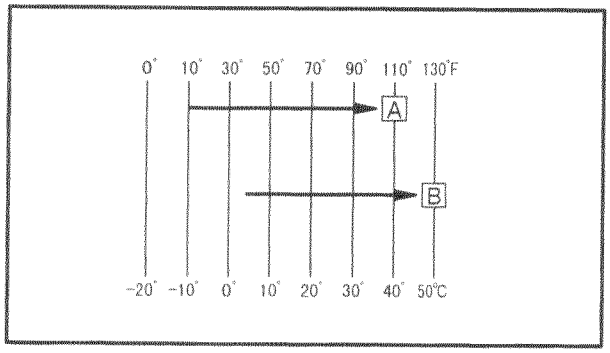

Recommended oil:
At –10°C (10°F) or higher A:
Yamalube 4 (10W-30)
or SAE
10W-30 type SE motor oil
At 5°C (40°F) or higher B:
Yamalube 4 (20W-40)
or SAE
20W-40 type SE motor oil

CAUTION:

- **Engine oil also lubricates the clutch and the wrong oil types or additives could cause clutch slippage. Therefore, do not add any chemical additives.**
- **Do not allow foreign materials to enter the crankcase.**

NOTE:

API Service "SE", "SF" and "SG" type or equivalent (e. g., "SF-SE", "SF-SE-CC", "SF-SE-SD")

4. Start the engine, warm it up for several minutes, and then turn it off.
5. Check:
   - engine oil level

NOTE:

Before checking the engine oil level, wait a few minutes until the oil has settled.

EB303081

CHANGING THE ENGINE OIL

1. Remove:
   - bottom cowling
     Refer to "COWLINGS".
2. Start the engine, warm it up for several minutes, and then turn it off.
3. Place a container under the engine oil drain bolt.
4. Remove:
   - engine oil filler cap ①
   - engine oil drain bolt ②
     (along with the washer)
5. Drain:
   - engine oil
     (completely from the crankcase)

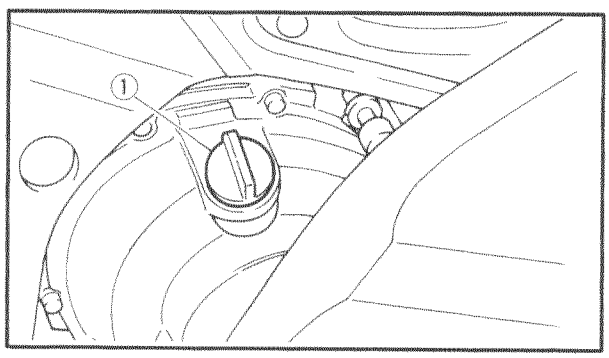

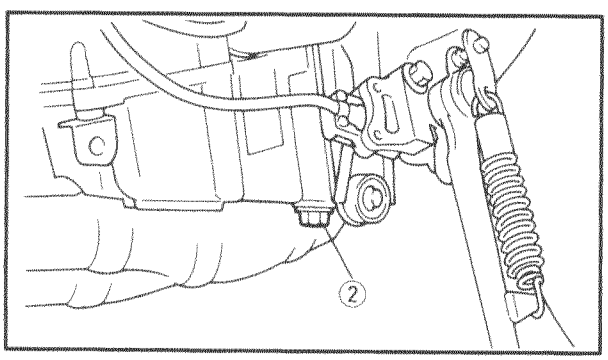

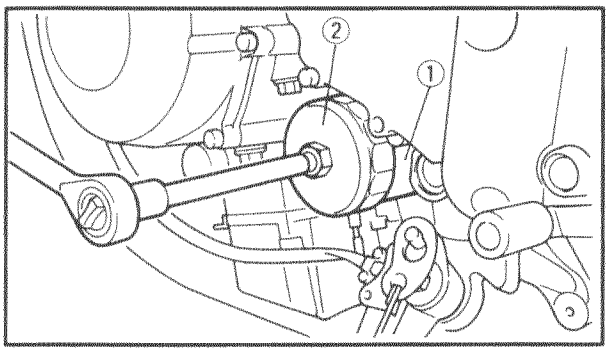

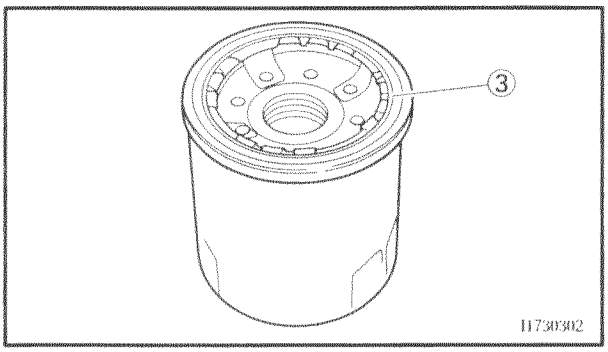

6. If the oil filter cartridge is also to be replaced, perform the following procedure.

▼▼▼▼▼▼▼▼▼▼▼▼▼▼▼▼▼▼▼▼▼▼▼▼▼▼▼▼▼▼▼▼

a. Remove the oil filter cartridge ① with an oil filter wrench ②.

	Oil filter wrench **90890-01426, YU-38411**

b. Lubricate the O-ring ③ of the new oil filter cartridge with a thin coat of engine oil.

CAUTION:

Make sure theat the O-ring ③ is positioned correctly in the groove of the oil filter cartridge.

c. Tighten the new oil filter cartridge to specification with an oil filter wrench.

	Oil filter cartridge **17 Nm (1.7 m•kg, 12 ft•lb)**

▲▲▲▲▲▲▲▲▲▲▲▲▲▲▲▲▲▲▲▲▲▲▲▲▲▲▲▲▲▲▲▲

7. Check:
   - engine oil drain bolt washer
     Damage → Replace.
8. Install:
   - engine oil drain bolt

	43 Nm (4.3 m•kg, 31 ft•lb)

9. Fill:
   - crankcase
     (with the specified amount of the recommended engine oil)

	Quantity **Total amount** **3.5 L (3.7 US qt)** **Without oil filter cartridge replacement** **2.5 L (2.64 US qt)** **With oil filter cartridge replacement** **2.7 L (2.85 US qt)**

10. Install:
    - engine oil filler cap
11. Start the engine, warm it up for several minutes, and then turn it off.
12. Check:
    - engine
      (for engine oil leaks)

13. Check:
    - engine oil level
      Refer to "CHECKING THE ENGINE OIL LEVEL".
14. Install:
    - bottom cowling
      Refer to "COWLINGS".

EB303090

MEASURING THE ENGINE OIL PRESSURE

1. Check:
    - engine oil level
      Below the minimum level mark → Add the recommended engine oil to the proper level.
2. Start the engine, warm it up for several minutes, and then turn it off.

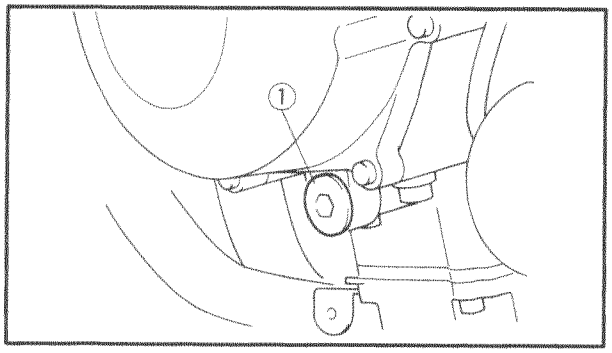

CAUTION:

When the engine is cold, the engine oil will have a higher viscosity, causing the engine oil pressure to increase. Therefore, be sure to measure the engine oil pressure after warming up the engine.

3. Remove:
    - oil gallery bolt ①

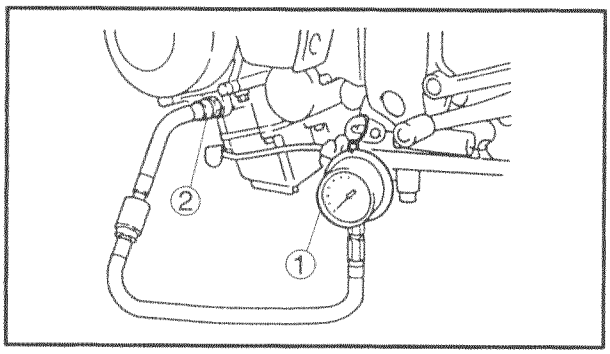

WARNING

The engine, muffler and engine oil are extremely hot.

4. Install:
    - oil pressure gauge ①
    - adapter ②

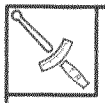

Oil pressure gauge
90890-03153
Adapter
90890-03139

5. Measure:
    - engine oil pressure
      (at the following conditions)

Engine oil pressure
240 kpa (2.4 kg/cm^2, 34.1 psi)
Engine speed
Approx. 6000 r/min
Engine oil temperature
96°C (205°F)

NOTE:

Regarding the oil pressure as its own data may fluctuate depending on the oil temperature and viscosity, the oil pressure may fluctuate when measuring. The following data should be used only as a reference when measuring the engine oil pressure.

Out of specification → Adjust.

Engine oil pressure	Possible cause
Below specification	Faulty oil pump Clogged oil filter Leaking oil passapage Broken or damaged oil seal
Above specification	Leaking oil passage Faulty oil filter Oil viscosity too high

6. Tighten the oil gallery bolt

	20 Nm (2.0 m•kg, 14 ft•lb)

EB303100

ADJUSTING THE CLUTCH CABLE FREE PLAY

1. Measure:
   - clutch cable free play ⓐ
   Out of specification → Adjust.

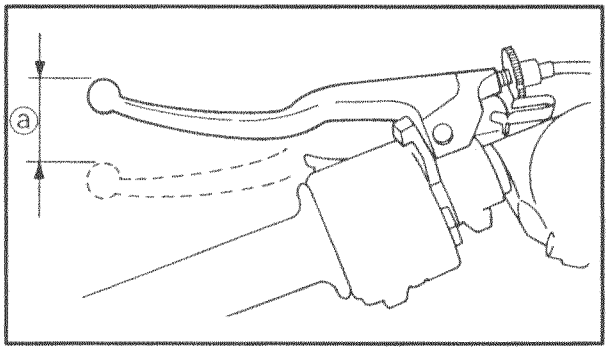

	Clutch cable free play (at the end of the clutch lever) **10 ~ 15 mm (0.39 ~ 0.59 in)**

2. Adjust:
   - clutch cable free play

▼▼▼▼▼▼▼▼▼▼▼▼▼▼▼▼▼▼▼▼▼▼▼▼▼▼▼▼▼▼

Handlebar side

a. Turn the adjusting bolt ① in direction ⓐ or ⓑ until the specified clutch cable free play is obtained.

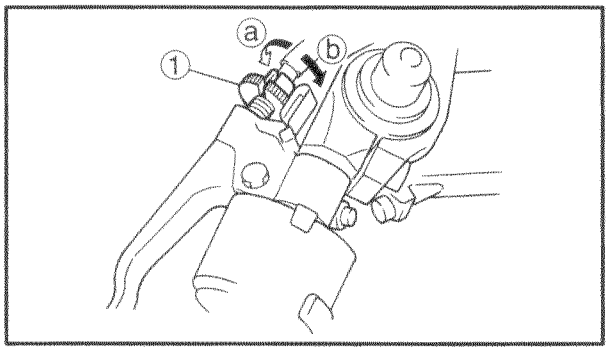

Direction ⓐ	Clutch cable free play is increased.
Direction ⓑ	Clutch cable free play is decreased.

NOTE:

If the specified clutch cable free play cannot be obtained on the handlebar side of the cable, use the adjusting nut on the engine side.

Engine side

a. Loosen the locknut ②.
b. Turn the adjusting nut ③ in direction ⓒ or ⓓ until the specified clutch cable free play is obtained.

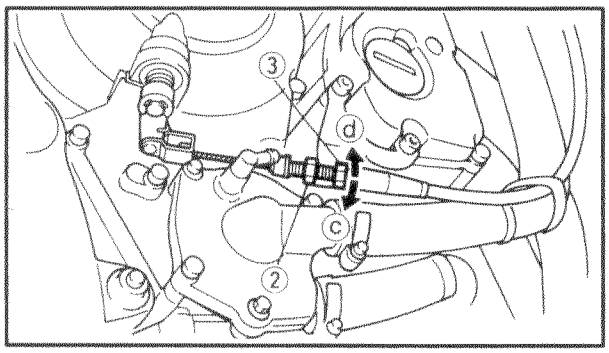

Direction ⓒ	Clutch cable free play is increased.
Direction ⓓ	Clutch cable free play is decreased.

c. Tighten the locknut.

▲▲▲▲▲▲▲▲▲▲▲▲▲▲▲▲▲▲▲▲▲▲▲▲▲▲▲▲▲▲

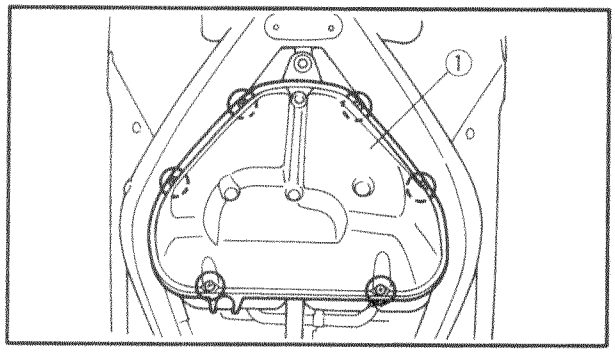

EB303130

CLEANING THE AIR FILTER ELEMENT

1. Remove:
   - fuel tank
     Refer to "FUEL TANK".
   - air filter case cover ①
   - air filter element

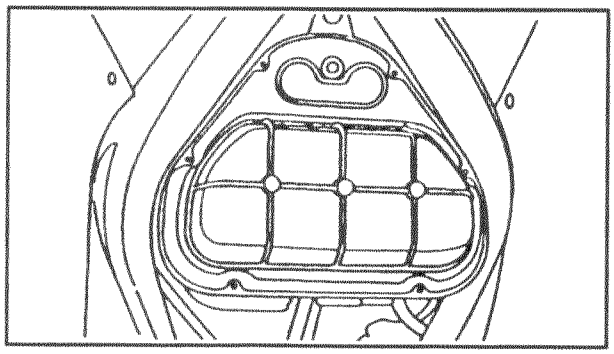

2. Clean:
   - air filter element
     Use solvent to clean the air filter element. After cleaning the air filter element, remove the solvent from the air filter element.
3. Apply the engine oil to the entire surface of the filter and remove the excess oil. The air filter should be wet but not dripping.
4. Check:
   - air filter element
     Damage → Replace.
5. Install:
   - air filter element
   - air filter case cover

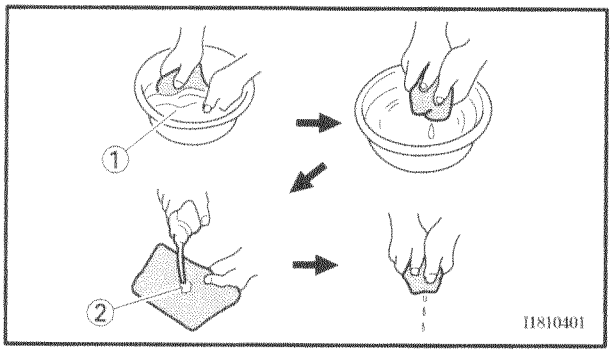

CAUTION:

Never operate the engine without the air filter element installed. Unfiltered air will cause rapid wear of engine parts and may damage the engine. Operating the engine without the air filter element will also affect the carburetor tuning, leading to poor engine performance and possible overheating.

NOTE:

When installing the air filter element into the air filter case cover, make sure that their sealing surfaces are aligned to prevent any air leaks.

6. Install:
   - fuel tank
     Refer to "FUEL TANK".

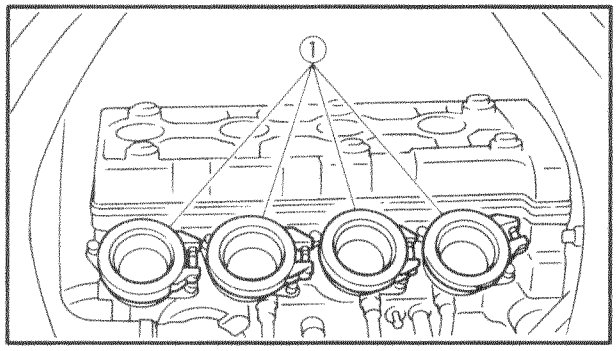

EB303171

CHECKING THE CARBURETOR JOINTS

The following procedure applies to all of the carburetor joints and intake manifolds.

1. Remove:
   - carburetor assembly
     Refer to "CARBURETORS" in chapter 6.
2. Check:
   - carburetor joint ①
     Cracks/damage → Replace.
     Refer to "CARBURETORS" in chapter 6.
3. Install:
   - carburetor assembly
     Refer to "CARBURETORS" in chapter 6.

EB303181

CHECKING THE FUEL HOSES AND FUEL FILTER

The following procedure applies to all of the fuel hoses.

1. Remove:
   - fuel tank
     Refer to "FUEL TANK".

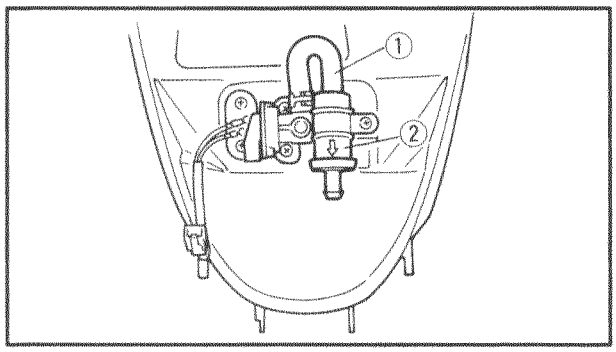

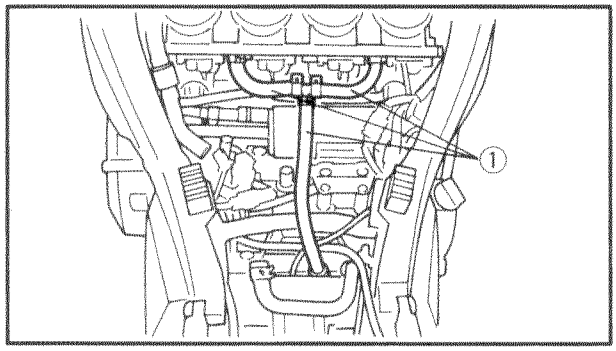

2. Check:
   - fuel hose ①
     Cracks/damage → Replace.
   - fuel filter ②
     Contaminants/damage → Replace.

NOTE:

- Drain and flush the fuel tank if abrasive damage to any components of the fuel line is evident.
- The arrow mark on the fuel filter must point towards the fuel pump as shown.

3. Install:
   - fuel tank
     Refer to "FUEL TANK".

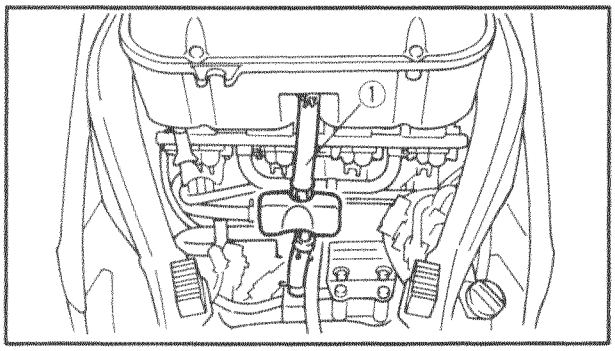

EB303190

CHECKING THE CRANKCASE BREATHER HOSE

1. Remove:
   - fuel tank
     Refer to "FUEL TANK".
2. Check:
   - crankcase breather hose ①
     Cranks/damage → Replace.
     Loose connection → Connect properly.

CAUTION:

Make sure that the crankcase breather hose is routed correctly.

3. Install:
   - fuel tank
     Refer to "FUEL TANK".

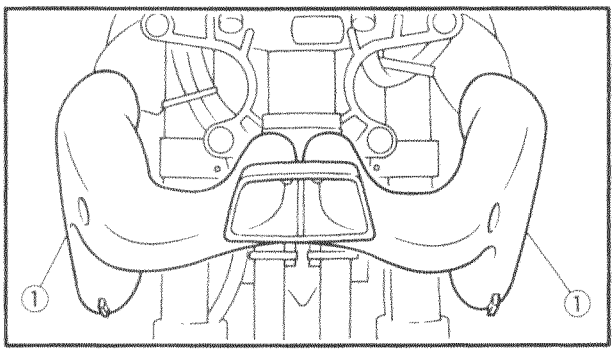

EAS00092

CLEANING THE AIR INTAKE SYSTEM

The following procedure applies to both air intake system.

1. Remove:
   - side cowling inner covers
   - side cowlings
   - front cowling inner covers
   - front cowling
   - fuel tank
2. Loosen:
   - clamps
     (on the inside of the front cowling)
3. Remove:
   - air intake system air ducts ①
4. Clean:
   - air intake system air ducts

a. Thoroughly flush out the air intake system air ducts with clean water.
b. Hold the air intake system air ducts upside down to allow the water to drain out.
c. Repeat the flushing steps until the excess water is clear and free of debris.
d. Place the air intake system air ducts in an upright position to allow any remaining water to drain out of the lower drain tube.
e. Keep the air intake system air ducts upright to allow it to dry sufficiently.

5. Install:
   - air intake system air ducts
   - fuel tank
   - front cowling
   - front cowling inner covers
   - side cowlings
   - side cowlings inner covers

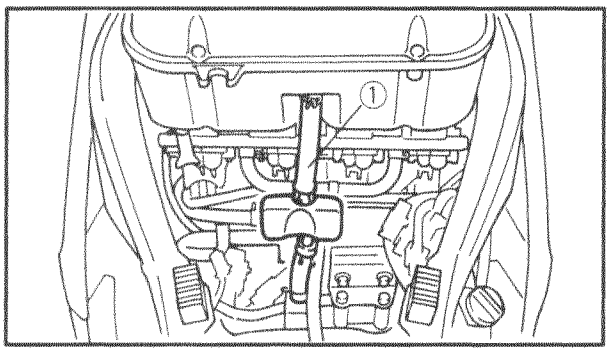

2. Check:
   - crankcase breather hose ①
     Cracks/damage → Replace.
     Loose connection → Connect properly.

CAUTION:

Make sure that the crankcase breather hose is routed correctly.

3. Install:
   - fuel tank
     Refer to "FUEL TANK"

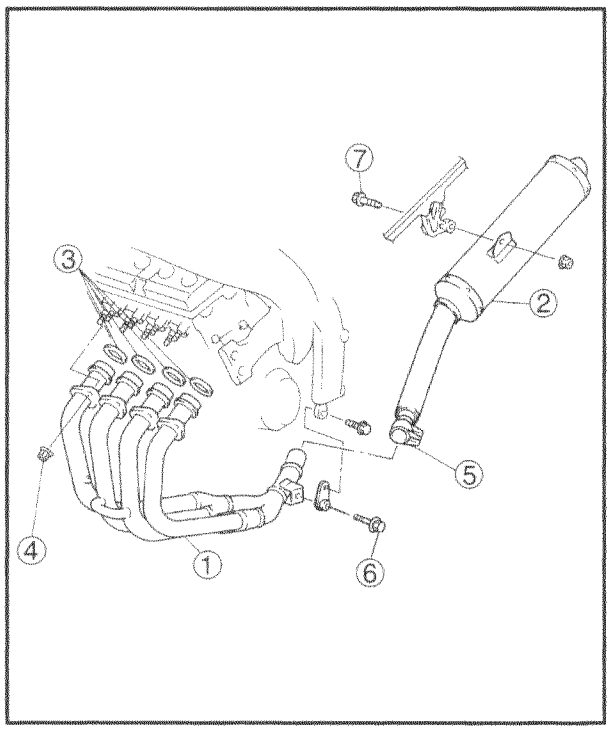

EB303200

CHECKING THE EXHAUST SYSTEM

The following procedure applies to all of the exhaust pipes and gaskets.

1. Remove:
   - radiator assembly
     Refer to "RADIATOR" in chapter 5.
2. Check:
   - exhaust pipe ①
   - muffler ②
     Cracks/damage → Replace.
   - gasket ③
     Exhaust gas leaks → Replace.
3. Measure:
   - tightening torque

	Exhaust pipe nut ④ **20 Nm (2.0 m•kg, 14 ft•lb)** **Muffler clamp bolt ⑤** **20 Nm (2.0 m•kg, 14 ft•lb)** **Exhaust pipe bolt ⑥** **20 Nm (2.0 m•kg, 14 ft•lb)** **Muffler bolt ⑦** **38 Nm (3.8 m•kg, 27 ft•lb)**

4. Install:
   - radiator assembly
     Refer to "RADIATOR" in chapter 5

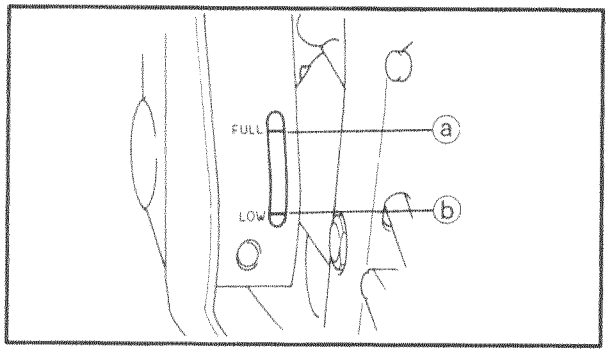

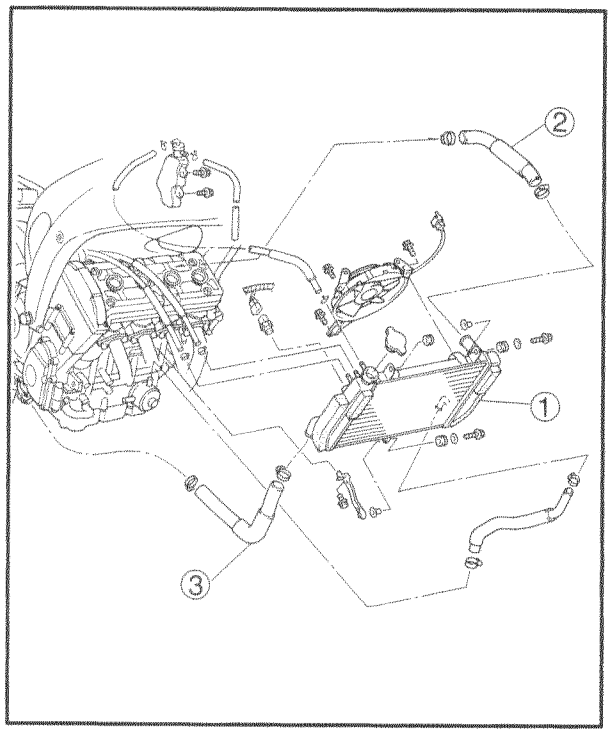

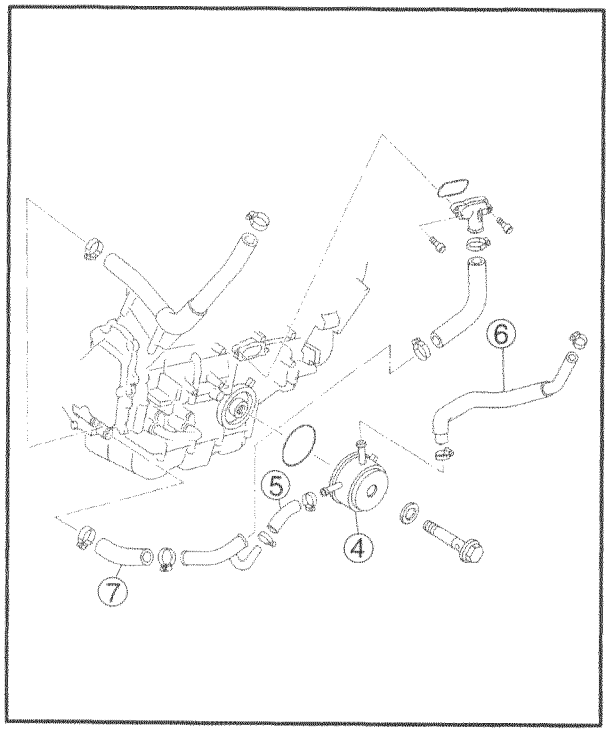

EB303220

CHECKING THE COOLANT LEVEL

1. Stand the motorcycle on a level surface.

NOTE:

- Place the motorcycle on a suitable stand.
- Make sure that the motorcycle is upright.

2. Check:
   - coolant level
     The coolant level should be between the maximum level mark ⓐ and minimum level marks ⓑ.
     Below the minimum level mark → Add the recommended coolant to the proper level.

CAUTION:

- **Adding water instead of coolant lowers the antifreeze content of the coolant. If water is used instead of coolant, check and correct the antifreeze concentration of the coolant.**
- **Use only distilled water. Soft water may be used if distilled water is not available.**

3. Start the engine, warm it up for several minutes, and then turn it off.
4. Check:
   - coolant level

NOTE:

Before checking the coolant level, wait a few minutes until it settles.

EB303230

CHECKING THE COOLING SYSTEM

1. Remove:
   - bottom cowling
   - side cowlings
     Refer to "COWLINGS".
2. Check:
   - radiator ①
   - radiator inlet hose ②
   - radiator outlet hose ③
   - oil cooler ④
   - oil cooler inlet hose ⑤
   - oil cooler outlet hose ⑥
   - water pump outlet hose ⑦
     Cracks/damage → Replace.
     Refer to "COOLING SYSTEM" in chapter 5.
3. Install:
   - side cowlings
   - bottom cowling
     Refer to "Cowlings".

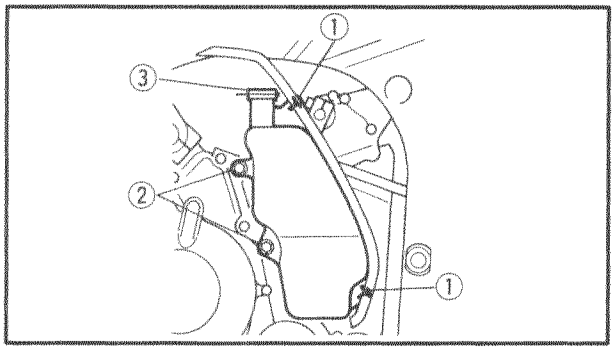

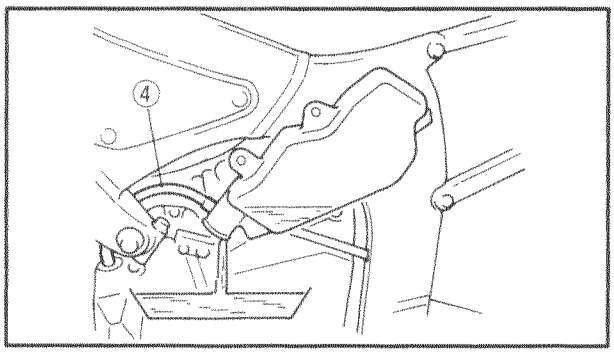

EB303240

CHANGING THE COOLANT

1. Remove:
   - bottom cowling
   - left side cowling
     Refer to "COWLINGS".
   - reservoir hose clamps ①
2. Remove:
   - coolant reservoir bolts ②
   - coolant reservoir cap ③

NOTE:

When draining the coolant from the coolant reservoir, be sure to tilt the reservoir so that coolant cannot flow through the coolant reservoir breather hose ④.

3. Drain:
   - coolant
     (from the coolant reservoir)
4. Install:
   - coolant reservoir bolts
   - reservoir cover

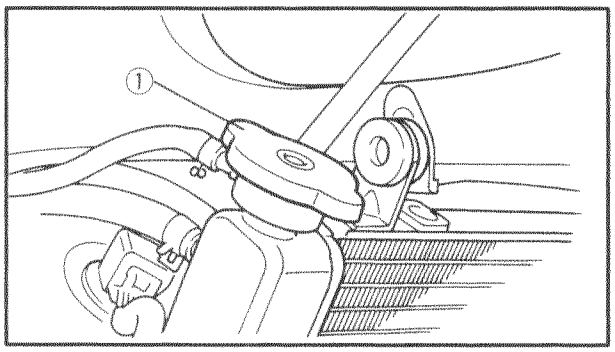

5. Remove:
   - radiator cap ①

⚠ WARNING

A hot radiator is under pressure. Therefore, do not remove the radiator cap when the engine is hot. Scalding hot fluid and steam may be blown out, which could cause serious injury. When the engine has cooled, open the radiator cap as follows:
Place a thick rag or a towel over the radiator cap and slowly turn the radiator cap counterclockwise toward the detent to allow any residual pressure to escape. When the hissing sound has stopped, turn the radiator cap counterclockwise while pressing down on it and then remove it.

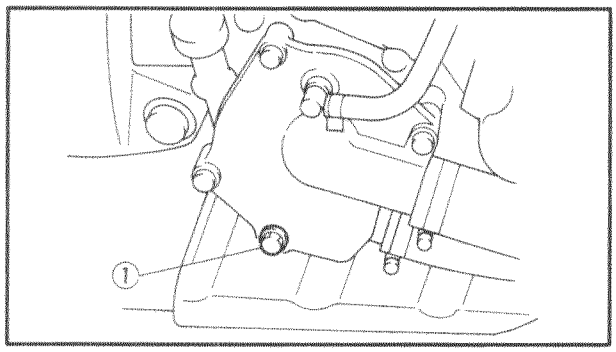

6. Remove:
   - coolant drain bolt ①
     (along with the copper washer)
7. Drain:
   - coolant
8. Check:
   - coper washer ①
   - coolant drain bolt ②
     Damage → Replace

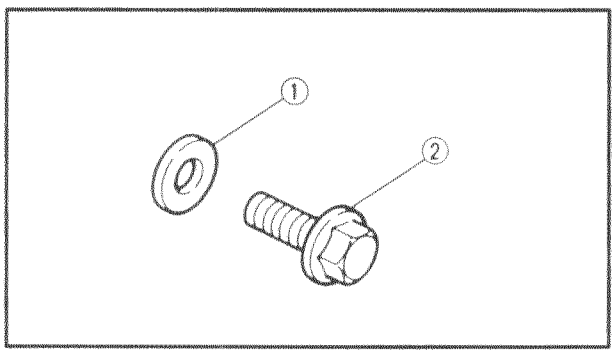

9. Install:
   - coolant drain bolt

	7 Nm (0.7 m•kg, 5.1 ft•lb)

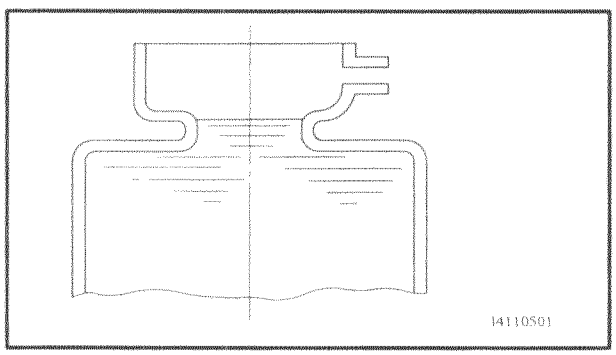

10. Fill:
    - cooling system
      (with the specified amount of the recommended coolant)

Recommended antifreeze
High-quality ethylene glycol antifreeze containing corrosion inhibitors for aluminum engines
Mixing ratio
1:1 (antifreeze: water)
Quantity
Total amount
2.15 L (2.27 US qt)
Coolant reservoir capacity
0.44 L (0.47 US qt)

Handling notes for coolant
Coolant is potentially harmful and should be handled with special care.

⚠ WARNING

- **If coolant splashes in your eyes, thoroughly wash them with water and consult a doctor.**
- **If coolant splashes on your clothes, quickly wash it away with water and then with soap and water.**
- **If coolant is swallowed, induce vomiting and get immediate medical attention.**

CAUTION:

- **Adding water instead of coolant lowers the antifreeze content of the coolant. If water is used instead of coolant, check, and if necessary, correct the antifreeze concentration of the coolant.**
- **Use only distilled water. However, soft water may be used if distilled water is not available.**
- **If coolant comes into contact with painted surfaces, immediately wash them with water.**
- **Do not mix different types of antifreeze.**

11. Install:
    - radiator cap

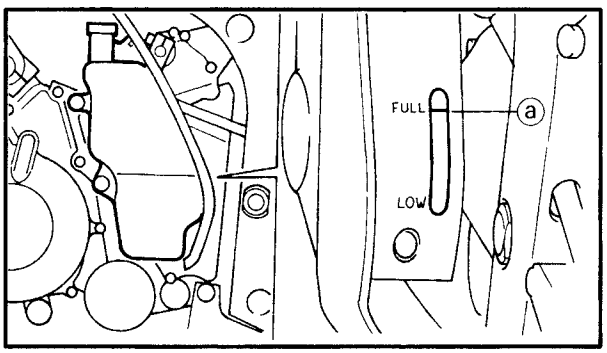

12. Fill:
    - coolant reservoir
      (with the recommended coolant to the maximum level mark ⓐ)
13. Install:
    - coolant reservoir cap
14. Start the engine, warm it up for several minutes, and then turn it off.

15. Check:
    - coolant level
      Refer to "CHECKING THE COOLANT LEVEL".

NOTE:

Before checking the coolant level, wait a few minutes until the coolant has settled.

16. Install:
    - left side cowling
    - bottom cowling
      Refer to "COWLINGS".

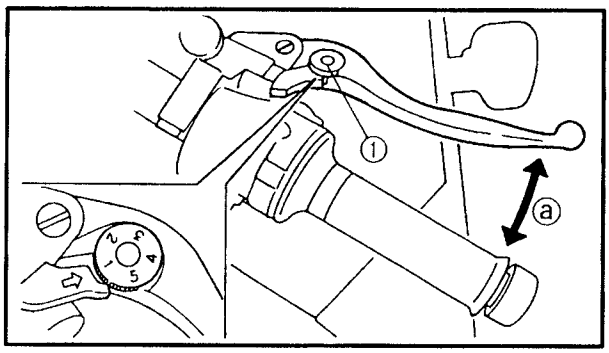

EB304001

CHASSIS

ADJUSTING THE FRONT BRAKE

1. Adjust:
   - brake lever position
     (distance ⓐ from the throttle grip to the brake lever)

▼▼▼▼▼▼▼▼▼▼▼▼▼▼▼▼▼▼▼▼▼▼▼▼▼▼▼▼▼▼▼▼

a. While pushing the brake lever forward, turn the adjusting dial ① until the brake lever is in the desired position.

NOTE:

Be sure to align the setting on the adjusting dial with the arrow mark ② on the brake lever holder.

Position #1	**Distance ⓐ is the largest.**
Position #5	**Distance ⓐ is the smallest.**

⚠ WARNING

After adjusting the brake lever position, make sure that the pin on the brake lever holder is firmly inserted in the hole in the adjusting dial.

▲▲▲▲▲▲▲▲▲▲▲▲▲▲▲▲▲▲▲▲▲▲▲▲▲▲▲▲▲▲▲▲

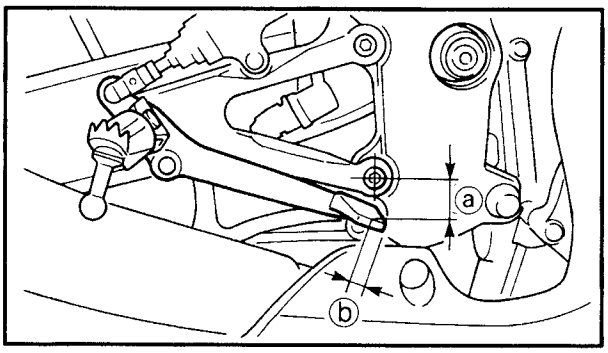

EB304010

ADJUSTING THE REAR BRAKE

1. Measure:
   - brake pedal position
     (distance ⓐ from the top of the brake pedal to the bottom of the rider footrest bracket bolt center)
     Out of specification → Adjust.

Brake pedal position (from the top of the brake pedal to the bottom of the rider footrest bracket bolt center)
4.3 ~ 9.3 mm (0.17 ~ 0.37 in)

ⓑ: 11mm (0.43 in)

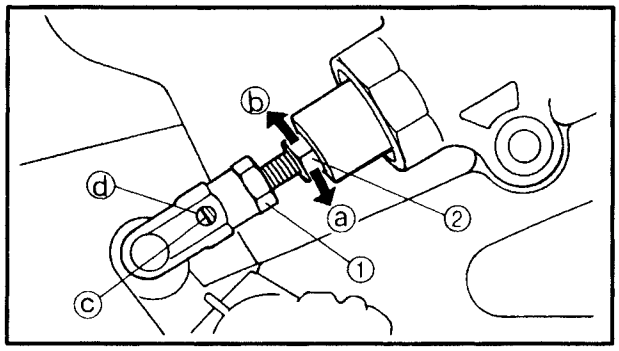

2. Adjust:
   - brake pedal position

▼▼▼▼▼▼▼▼▼▼▼▼▼▼▼▼▼▼▼▼▼▼▼▼▼▼▼▼▼▼▼▼

a. Loosen the locknut ①.
b. Turn the adjusting bolt ② in direction ⓐ or ⓑ until the specified brake pedal position is obtained.

Direction ⓐ	**Brake pedal is raised.**
Direction ⓑ	**Brake pedal is lowered.**

⚠ WARNING

After adjusting the brake pedal position, check that the end of the adjusting bolt ⓒ is visible through the hole ⓓ.

c. Tighten the locknut ① to specification.

	Locknut **16 Nm (1.6 m•kg, 12 ft•lb)**

⚠ WARNING

A soft or spongy feeling in the brake pedal can indicate the presence of air in the brake system. Before the vehicle is operated, the air must be removed by bleeding the brake system. Air in the brake system will considerably reduce braking performance and could result in loss of control and possibly an accident.
Therefore, check and, if necessary, bleed the brake system.

CAUTION:

After adjusting the brake pedal position, make sure that there is no brake drag.

▲▲▲▲▲▲▲▲▲▲▲▲▲▲▲▲▲▲▲▲▲▲▲▲▲▲▲▲▲▲▲▲

3. Adjust:
   - rear brake light switch
     Refer to "ADJUSTING THE REAR BRAKE LIGHT SWITCH".

EB304020

CHECKING THE BRAKE FLUID LEVEL

1. Stand the motorcycle on a level surface.

NOTE:

- Place the motorcycle on a suitable stand.
- Make sure that the motorcycle is upright.

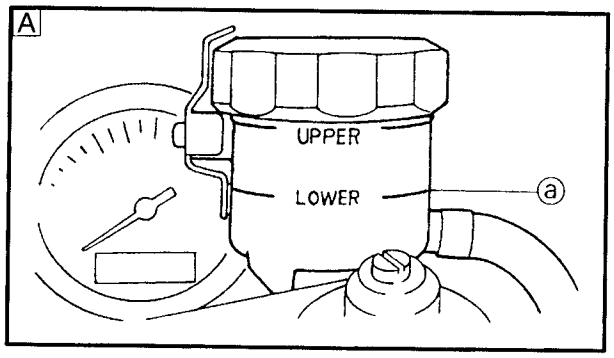

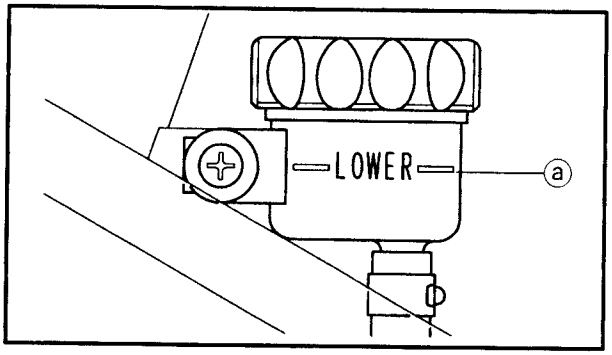

2. Check:
   - brake fluid level
     Below the minimum level mark ⓐ → Add the recommended brake fluid to the proper level.

Recommended brake fluid
DOT 4

A Front brake

B Rear brake

WARNING

- **Use only the designated brake fluid. Other brake fluids may cause the rubber seals to deteriorate, causing leakage and poor brake performance.**
- **Refill with the same type of brake fluid that is already in the system. Mixing brake fluids may result in a harmful chemical reaction, leading to poor brake performance.**
- **When refilling, be careful that water does not enter the brake fluid reservoir. Water will significantly lower the boiling point of the brake fluid and could cause vapor lock.**

CAUTION:

Brake fluid may damage painted surfaces and plastic parts. Therefore, always clean up any spilt brake fluid immediately.

NOTE:

In order to ensure a correct reading of the brake fluid level, make sure that the top of the brake fluid reservoir is horizontal.

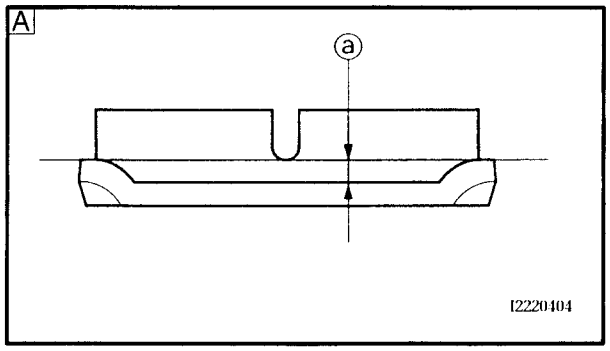

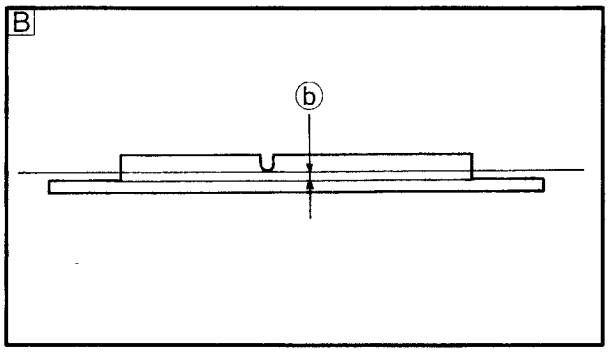

EB304032

CHECKING THE BRAKE PADS

The following procedure applies to all of the brake pads.

1. Operate the brake.
2. Check:
   - front brake pad
   - rear brake pad

   Brake pad wear limit ⓐ
   Wear limit reached → Replace the brake pads as a set.
   Refer to "FRONT AND REAR BRAKES" in chapter 7.

Brake pad wear limit
ⓐ 0.5 mm (0.02 in)
ⓑ 0.8 mm (0.03 in)

A Front brake

B Rear brake

EB304050

ADJUSTING THE REAR BRAKE LIGHT SWITCH

NOTE:

- The rear brake light switch is operated by movement of the brake pedal.
- The rear brake light switch is properly adjusted when the brake light comes on just before the braking effect starts.

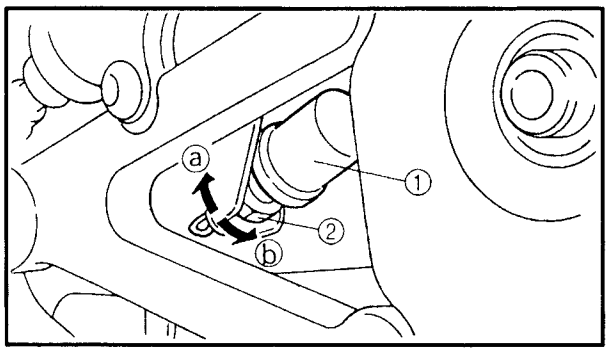

1. Check:
   - rear brake light operation timing
   Incorrect → Adjust.
2. Adjust:
   - rear brake light operation timing

▼▼▼▼▼▼▼▼▼▼▼▼▼▼▼▼▼▼▼▼▼▼▼▼▼▼▼▼▼▼▼▼

a. Hold the main body ① of the rear brake light switch so that it does not rotate and turn the adjusting nut ② in direction ⓐ or ⓑ until the rear brake light comes on at the proper time.

Direction ⓐ	**Brake light comes on sooner.**
Direction ⓑ	**Brake light comes on later.**

▲▲▲▲▲▲▲▲▲▲▲▲▲▲▲▲▲▲▲▲▲▲▲▲▲▲▲▲▲▲▲▲

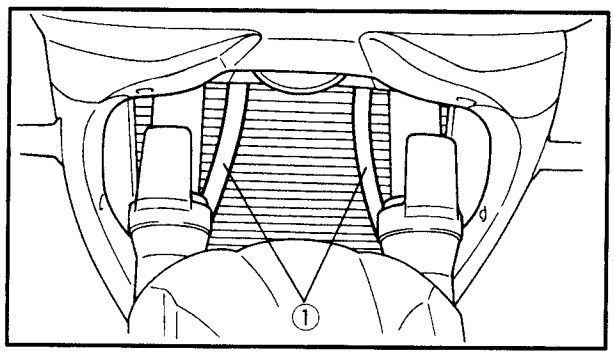

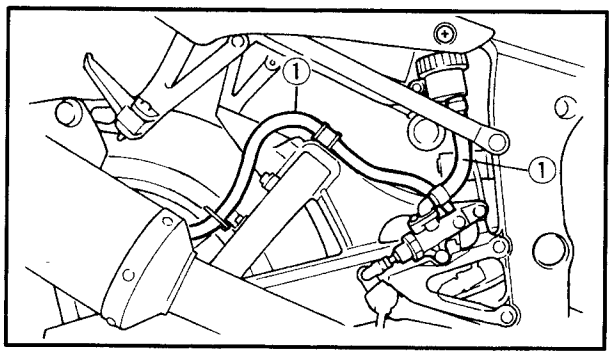

EB304062

CHECKING THE BRAKE HOSES

The following procedure applies to all of the brake hoses and brake hose clamps.

1. Check:
   - brake hose ①
     Cracks/damage/wear → Replace.
2. Check:
   - brake hose clamp
     Loose → Tighten the clamp bolt.
3. Hold the motorcycle upright and apply the brake several times.
4. Check:
   - brake hose
     Brake fluid leakage → Replace the damaged hose.
     Refer to "FRONT AND REAR BRAKES" in chapter 7.

EB304072

BLEEDING THE HYDRAULIC BRAKE SYSTEM

⚠ WARNING

Bleed the hydraulic brake system whenever:
- **the brake system was disassembled,**
- **a brake hose was loosened, disconnected or replaced,**
- **the brake fluid level is very low,**
- **brake operation is faulty.**

NOTE:
- Be careful not to spill any brake fluid or allow the brake fluid reservoir to overflow.
- When bleeding the hydraulic brake system, make sure that there is always enough brake fluid before applying the brake. Ignoring this precaution could allow air to enter the hydraulic brake system, considerably lengthening the bleeding procedure.
- If bleeding is difficult, it may be necessary to let the brake fluid settle for a few hours. Repeat the bleeding procedure when the tiny bubbles in the hose have disappeared.

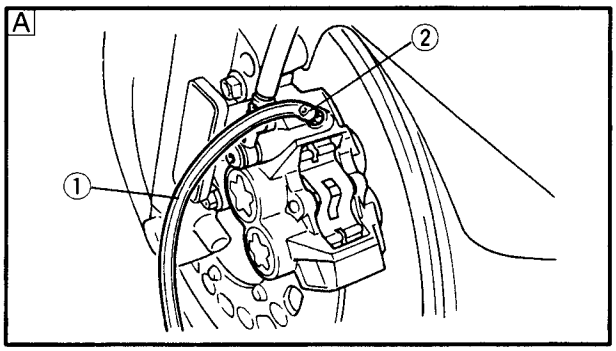

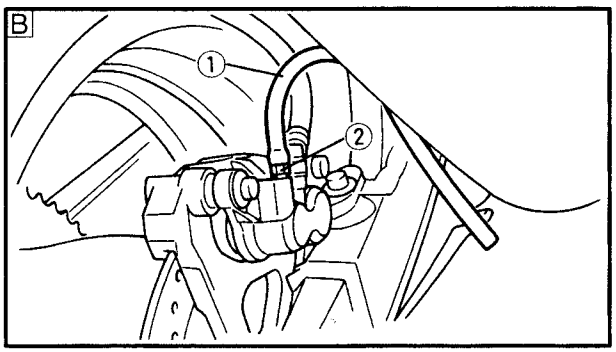

5. Bleed:
   - hydraulic brake system

▼▼▼▼▼▼▼▼▼▼▼▼▼▼▼▼▼▼▼▼▼▼▼▼▼▼▼▼▼▼▼▼

a. Fill the brake fluid reservoir to the proper level with the recommended brake fluid.
b. Install the brake fluid reservoir diaphragm.
c. Connect a clear plastic hose ① tightly to the bleed screw ②.

A Front brake

B Rear brake

d. Place the other end of the hose into a container.
e. Slowly apply the brake several times.
f. Fully squeeze the brake lever or fully depress the brake pedal and hold it in position.
g. Loosen the bleed screw.

NOTE:

Loosening the bleed screw will release the pressure and cause the brake lever to contact the throttle grip or the brake pedal to fully extend.

h. Tighten the bleed screw and then release the brake lever or brake pedal.
i. Repeat steps (e) to (h) until all of the air bubbles have disappeared from the brake fluid in the plastic hose.
j. Tighten the bleed screw to specification.

	Bleed screw **6 Nm (0.6 m•kg, 4.3 ft•lb)**

k. Fill the brake fluid reservoir to the proper level with the recommended brake fluid.
   Refer to "CHECKING THE BRAKE FLUID LEVEL".

⚠ WARNING

After bleeding the hydraulic brake system, check the brake operation.

▲▲▲▲▲▲▲▲▲▲▲▲▲▲▲▲▲▲▲▲▲▲▲▲▲▲▲▲▲▲▲▲

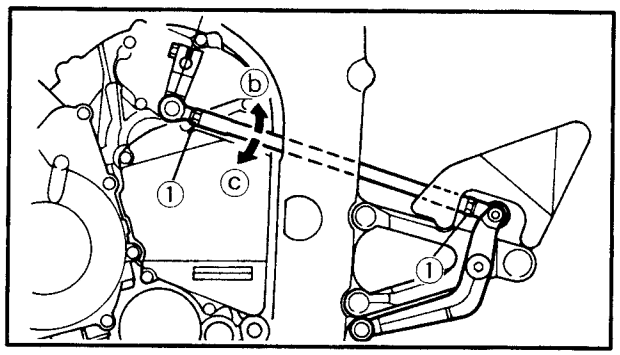

EB304081

ADJUSTING THE SHIFT PEDAL

NOTE:

The shift pedal position is determined by the shift rod length.

1. Measure:
   • incorrect → Adjust.

The top of sift pedal should be aligned with the lower part of the bracket. (from the horizontal view)

2. Adjust:
   • installed shift rod length

▼▼▼▼▼▼▼▼▼▼▼▼▼▼▼▼▼▼▼▼▼▼▼▼▼▼▼▼▼▼▼▼

a. Loosen both locknuts ①.
b. Turn the shift rod ② in direction ⓑ or ⓒ to obtain the correct shift pedal position.

Direction ⓑ	**Installed shift rod length increases.**
Direction ⓒ	**Installed shift rod length decreases.**

c. Tighten both locknuts.
d. Make sure that the installed shift rod length is within specification.

▲▲▲▲▲▲▲▲▲▲▲▲▲▲▲▲▲▲▲▲▲▲▲▲▲▲▲▲▲▲▲▲

EB304092

ADJUSTING THE DRIVE CHAIN SLACK

NOTE:

The drive chain slack must be checked at the tightest point on the chain.

CAUTION:

A drive chain that is too tight will overload the engine and other vital parts, and one that is too loose can skip and damage the swingarm or cause an accident. Therefore, keep the drive chain slack within the specified limits.

1. Stand the motorcycle on a level surface.

⚠ WARNING

Securely support the motorcycle so that there is no danger of it falling over.

NOTE:

Place the motorcycle on a suitable stand so that the rear wheel is elevated.

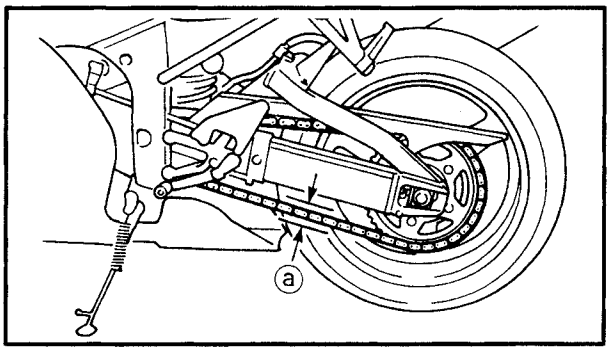

2. Rotate the rear wheel several times and check the drive chain to locate its tightest point.
3. Measure:
   - drive chain slack ⓐ
     Out of specification → Adjust.

	Drive chain slack **40 ~ 50 mm (1.57 ~ 1.97 in)**

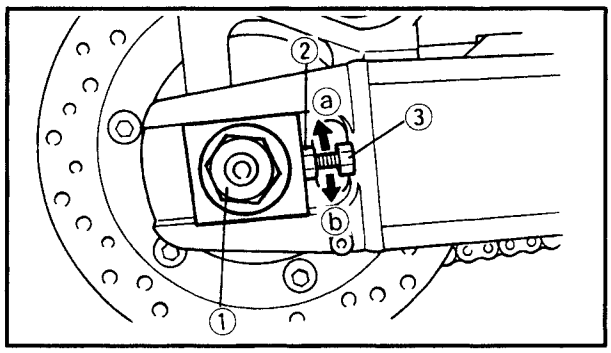

4. Adjust:
   - drive chain slack

▼▼▼▼▼▼▼▼▼▼▼▼▼▼▼▼▼▼▼▼▼▼▼▼▼▼▼▼▼▼▼▼

a. Loosen the wheel axle nut ①.
b. Loosen both locknuts ②.
c. Turn both adjusting bolts ③ in direction ⓐ or ⓑ until the specified drive chain slack is obtained.

Direction ⓐ	**Drive chain slack is reduced.**
Direction ⓑ	**Drive chain slack is increased.**

NOTE:

To maintain the proper wheel alignment, adjust both sides evenly.

d. Tighten both locknuts to specification.

	Locknut **16 Nm (1.6 m•kg, 12 ft•lb)**

e. Tighten the wheel axle nut to specification.

	Wheel axle nut **150 Nm (15.0 m•kg, 108 ft•lb)**

▲▲▲▲▲▲▲▲▲▲▲▲▲▲▲▲▲▲▲▲▲▲▲▲▲▲▲▲▲▲▲▲

EB304100

LUBRICATING THE DRIVE CHAIN

The drive chain consists of many interacting parts. If the drive chain is not maintained properly, it will wear out rapidly. Therefore, the drive chain should be serviced, especially when the motorcycle is used in dusty areas. This motorcycle has a drive chain with small rubber O-rings between each side plate. Steam cleaning, high-pressure washing, certain solvents, and the use of a coarse brush can damage these O-rings. Therefore, use only kerosine to clean the drive chain. Wipe the drive chain dry and thoroughly lubricate it with engine oil or chain lubricant that is suitable for O-ring chains. Do not use any other lubricants on the drive chain since they may contain solvents that could damage the O-rings.

Recommended lubricant
Engine oil or chain lubricant suitable for O-ring chains

EB304130

CHECKING AND ADJUSTING THE STEERING HEAD

1. Stand the motorcycle on a level surface.

WARNING

Securely support the motorcycle so that there is no danger of it falling over.

NOTE:

Place the motorcycle on a suitable stand so that the front wheel is elevated.

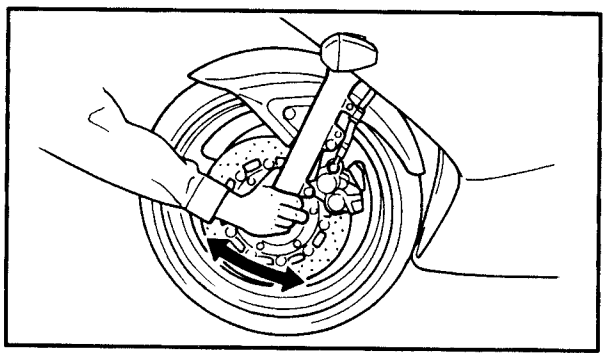

2. Check:
   - steering head
     Grasp the bottom of the front fork legs and gently rock the front fork.
     Looseness/binding → Adjust the steering head.

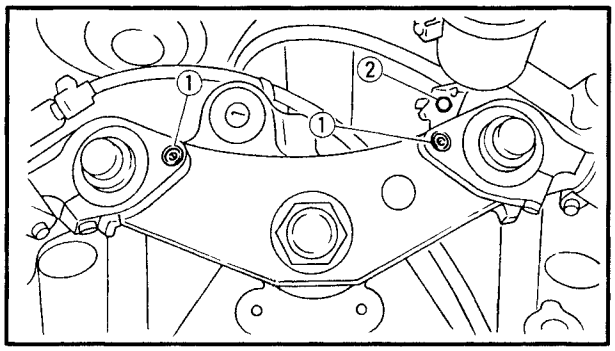

3. Remove:
   - upper bracket bolts ①
   - front brake fluid reservoir bolt ②

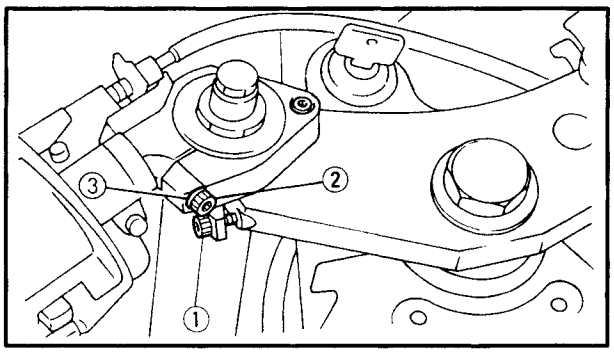

4. Loosen:
   - upper bracket pinch bolts ①
   - handlebar pinch bolts ②
   - washer ③
5. Remove:
   - handlebars
     (from the upper bracket)

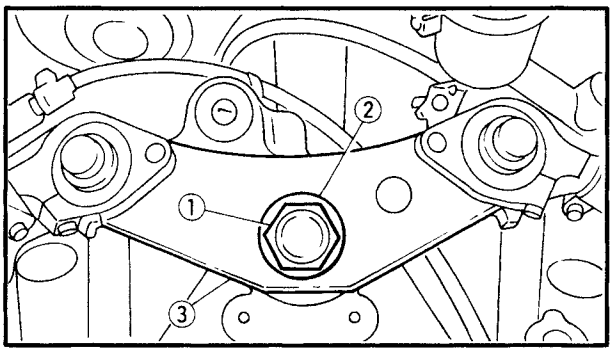

6. Remove:
   - steering stem nut ①
   - washer ②
   - upper bracket ③

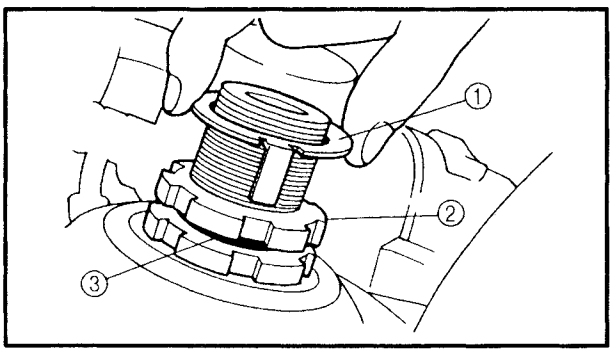

7. Adjust:
   - steering head

▼▼▼▼▼▼▼▼▼▼▼▼▼▼▼▼▼▼▼▼▼▼▼▼▼▼▼▼▼▼▼▼

a. Remove the lock washer ①, the upper ring nut ②, and the washer ③.
b. Loosen the lower ring nut ④ and then tighten it to specification with a ring nut wrench ⑤.

NOTE:

Set the torque wrench at a right angle to the steering nut wrench.

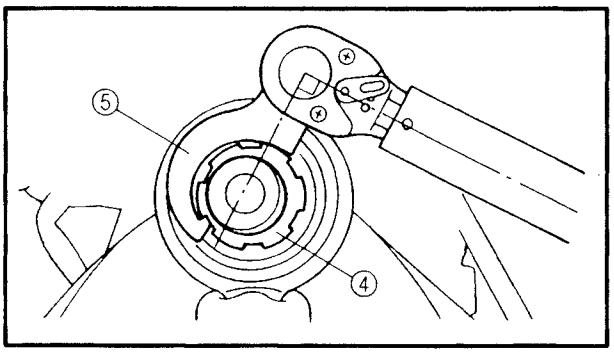

	Steering nut wrench **90890-01403, YU-33975**

	Lower ring nut (initial tightening torque) **17 Nm (1.7 m•kg, 12 ft•lb)**

c. Loosen the lower ring nut completely, then tighten it to specification.

WARNING

Do not overtighten the lower ring nut.

Lower ring nut (final tightening torque)
9 Nm (0.9 m•kg, 6.5 ft•lb)

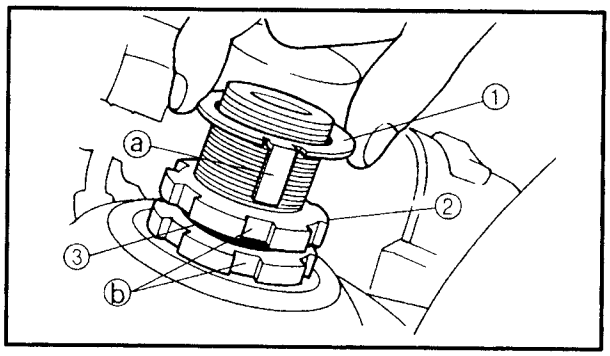

d. Check the steering head for looseness or binding by turning the front fork all the way in both directions. If any binding is felt, remove the lower bracket and check the upper and lower bearings.
Refer to "STEERING HEAD" in chapter 7.
e. Install the washer ③.
f. Install the upper ring nut ②.
g. Finger tighten the upper ring nut ②, then align the slots of both ring nuts.
If necessary, hold the lower ring nut and tighten the upper ring nut until their slots are aligned.
h. Install the lock washer ①.

NOTE:

Make sure that the lock washer tabs ⓐ sit correctly in the ring nut slots ⓑ.

8. Install:
- steering stem nut
  115 Nm (11.5 m•kg, 83 ft•lb)
- upper bracket bolt
  13 Nm (1.3 m•kg, 9.4 ft•lb)
- handlebar pinch bolt
  13 Nm (1.3 m•kg, 9.4 ft•lb)
- upper bracket pinch bolt
  23 Nm (2.3 m•kg, 17 ft•lb)

9. Measure:
- steering head tension
  (with the motorcycle still on the stand)

NOTE:

Make sure that all of the cables and wires are properly routed.

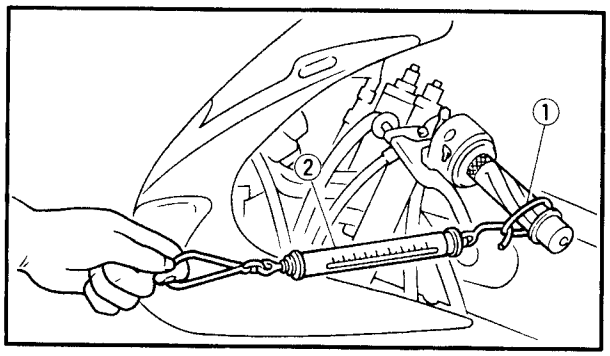

a. Point the front wheel straight ahead.
b. Install a plastic locking tie ① loosely around the end of the handlebar as shown.
c. Hook a spring gauge ② onto the plastic locking tie.

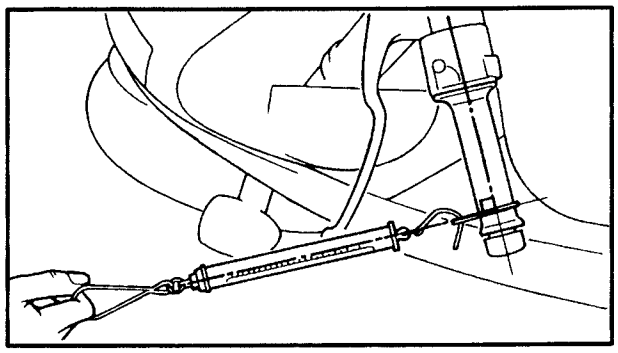

d. Hold the spring gauge at a 90° angle from the handlebar, pull the spring gauge, and record the measurement when the handlebar starts to turn.

	Steering head tension **200 ~ 500 g (7.1 ~ 17.6 oz)**

e. Repeat the above procedure on the opposite handlebar.
f. If the steering head tension is out of specification (both handlebars should be within specification), remove the upper bracket and loosen or tighten the upper ring nut.
g. Reinstall the upper bracket and measure the steering head tension again as described above.
h. Repeat the above procedure until the steering head tension is within specification.
i. Grasp the bottom of the front fork legs and gently rock the front fork.
   Looseness or binding → Adjust the steering head.

▲▲▲▲▲▲▲▲▲▲▲▲▲▲▲▲▲▲▲▲▲▲▲▲▲▲▲▲▲▲▲▲

EB304141

CHECKING THE FRONT FORK

1. Stand the motorcycle on a level surface.

⚠ WARNING

Securely support the motorcycle so that there is no danger of it falling over.

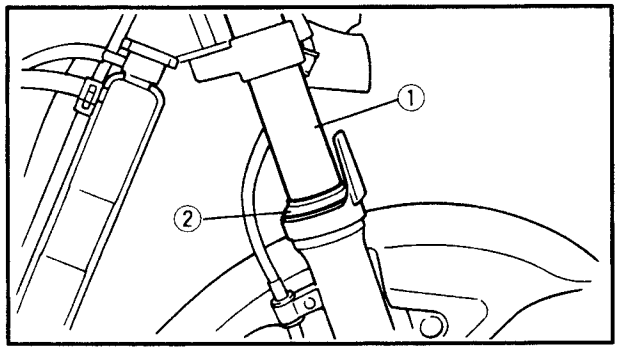

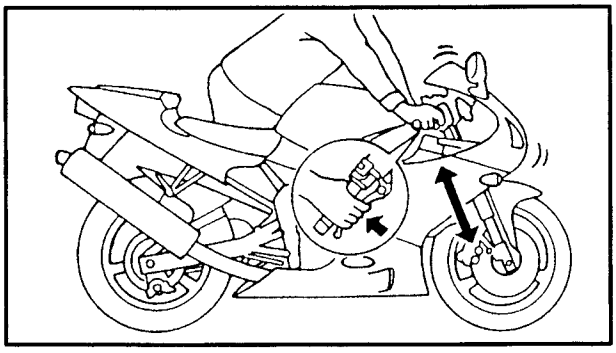

2. Check:
   - inner tube ①
     Damage/scratches → Replace.
   - oil seal ②
     Oil leakage → Replace.
3. Hold the motorcycle upright and apply the front brake.
4. Check:
   - front fork operation
     Push down hard on the handlebars several times and check if the front fork rebounds smoothly.
     Rough movement → Repair.
     Refer to "FRONT FORK" in chapter 7.

EB304153

ADJUSTING THE FRONT FORK LEGS

The following procedure applies to both of the front fork legs.

WARNING

- **Always adjust both front fork legs evenly. Uneven adjustment can result in poor handling and loss of stability.**
- **Securely support the motorcycle so that there is no danger of it falling over.**

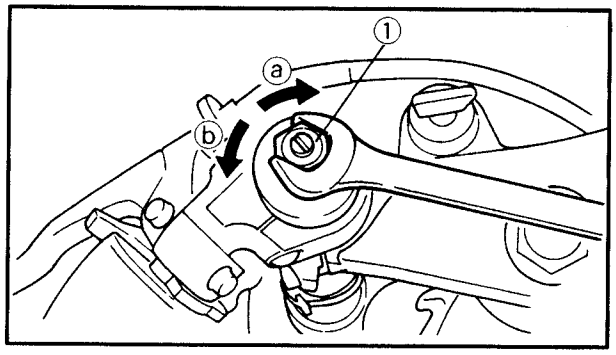

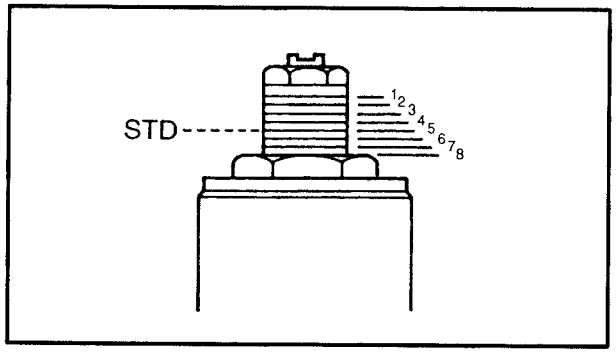

Spring preload

CAUTION:

- **Grooves are provided to indicate the adjustment position.**
- **Never go beyond the maximum or minimum adjustment positions.**

1. Adjust:
   - spring preload

a. Turn the adjusting bolt ① in direction ⓐ or ⓑ.

Direction ⓐ	**Spring preload is increased (suspension is harder).**
Direction ⓑ	**Spring preload is decreased (suspension is softer).**

Standard

	Hard								Soft
Adjusting position	1	2	3	4	5	6	7	8	

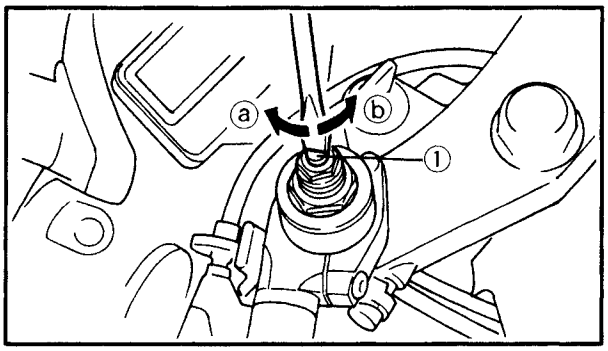

Rebound damping

CAUTION:

Never go beyond the maximum or minimum adjustment positions.

1. Adjust:
   • rebound damping

▼▼▼▼▼▼▼▼▼▼▼▼▼▼▼▼▼▼▼▼▼▼▼▼▼▼▼▼▼▼▼▼

a. Turn the adjusting screw ① in direction ⓐ or ⓑ.

Direction ⓐ	**Rebound damping is increased (suspension is harder).**
Direction ⓑ	**Rebound damping is decreased (suspension is softer).**

Adjusting positions
Minimum: 9 clicks out*
Standard: 6 clicks out*
Maximum: 1 clicks out*
*** from the fully turned-in position**

NOTE:

Although the number of clicks between the minimum and maximum settings may vary with each individual shock absorber and may not exactly match these specifications, it is always the full damping force range that extends over the actual number of clicks.

▲▲▲▲▲▲▲▲▲▲▲▲▲▲▲▲▲▲▲▲▲▲▲▲▲▲▲▲▲▲▲▲

Compression damping

CAUTION:

Never go beyond the maximum or minimum adjustment positions.

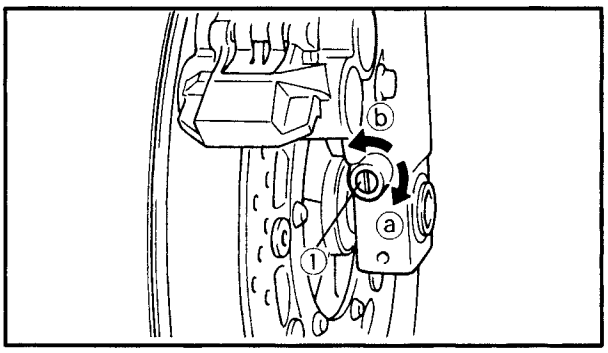

1. Adjust:
   • compression damping

▼▼▼▼▼▼▼▼▼▼▼▼▼▼▼▼▼▼▼▼▼▼▼▼▼▼▼▼▼▼▼▼

a. Turn the adjusting screw ① in direction ⓐ or ⓑ.

Direction ⓐ	**Compression damping is increased (suspension is harder).**
Direction ⓑ	**Compression damping is decreased (suspension is softer).**

Adjusting positions
Minimum: 10 clicks out*
Standard: 6 clicks out*
Maximum: 1 clicks out*
*** from the fully turned-in position**

NOTE:

Although the number of clicks between the minumum and maximum settings may vary with each individual shock absorber and may not exactly match these specifications, it is always the full damping force range that extends over the actual number of clicks.

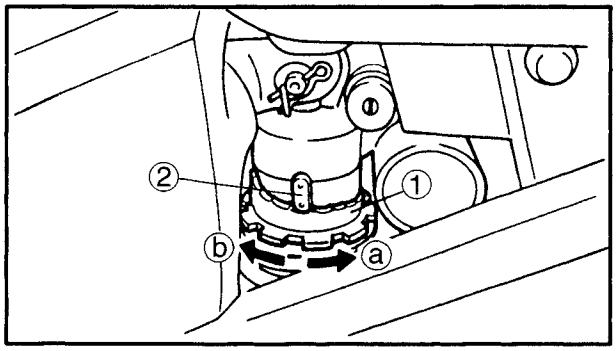

EB304162

ADJUSTING THE REAR SHOCK ABSORBER ASSEMBLY

WARNING

Securely support the motorcycle so that there is no danger of it falling over.

Spring preload

CAUTION:

Never go beyond the maximum or minimum adjustment positions.

1. Adjust:
   - spring preload

NOTE:

Adjust the spring preload with the special wrench and extension bar included in the owner's tool kit.

▼▼▼▼▼▼▼▼▼▼▼▼▼▼▼▼▼▼▼▼▼▼▼▼▼▼▼▼▼▼▼▼

a. Turn the adjusting ring ① in direction ⓐ or ⓑ.
b. Align the desired position on the adjusting ring with the position indicator ②.

Direction ⓐ	**Spring preload is increased (suspension is harder).**
Direction ⓑ	**Spring preload is decreased (suspension is softer).**

Adjusting positions
Minimum: 1
Standard: 4
Maximum: 9

▲▲▲▲▲▲▲▲▲▲▲▲▲▲▲▲▲▲▲▲▲▲▲▲▲▲▲▲▲▲▲▲

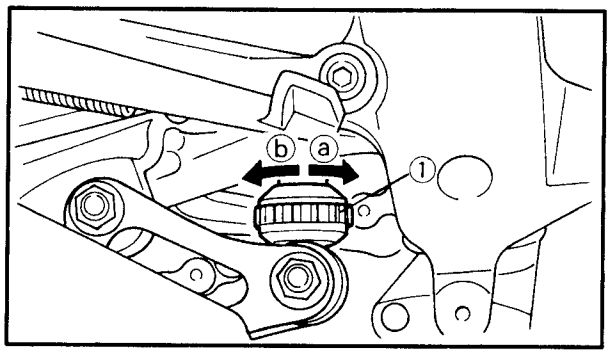

Rebound damping

CAUTION:

Never go beyond the maximum or minimum adjustment positions.

1. Adjust:
   - rebound damping

▼▼▼▼▼▼▼▼▼▼▼▼▼▼▼▼▼▼▼▼▼▼▼▼▼▼▼▼▼▼▼▼

a. Turn the adjusting screw ① in direction ⓐ or ⓑ.

Direction ⓐ	**Rebound damping is increased (suspension is harder).**
Direction ⓑ	**Rebound damping is decreased (suspension is softer).**

Adjusting positions
Minimum: 25 clicks out*
Standard: 9 clicks out*
Maximum: 1 click out*
*** from the fully turned-in position**

NOTE:

Although the number of clicks between the minimum and maximum settings may vary with each individual shock absorber and may not exactly match these specifications, it is always the full damping force range that extends over the actual number of clicks.

▲▲▲▲▲▲▲▲▲▲▲▲▲▲▲▲▲▲▲▲▲▲▲▲▲▲▲▲▲▲▲▲

Compression damping

CAUTION:

Never go beyond the maximum or minimum adjustment positions.

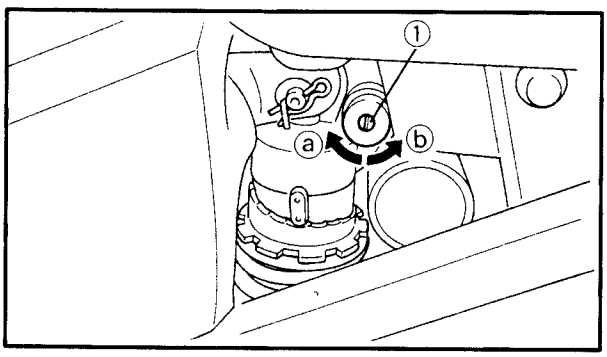

1. Adjust:
   - compression damping

▼▼▼▼▼▼▼▼▼▼▼▼▼▼▼▼▼▼▼▼▼▼▼▼▼▼▼▼▼▼▼▼

a. Turn the adjusting screw ① in direction ⓐ or ⓑ.

Direction ⓐ	**Compression damping is increased (suspension is harder).**
Direction ⓑ	**Compression damping is decreased (suspension is softer).**

Adjusting positions
Minimum: 13 clicks out*
Standard: 7 clicks out*
Maximum: 1 click out*
*** from the fully turned-in position**

NOTE:

Although the number of clicks between the minimum and maximum settings may vary with each individual shock absorber and may not exactly match these specifications, it is always the full damping force range that extends over the actual number of clicks.

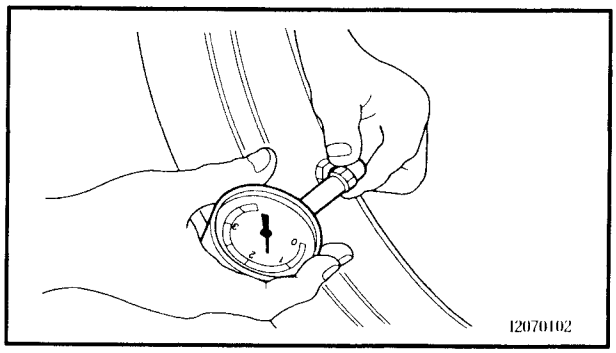

EB304170

CHECKING THE TIRES

The following procedure applies to both of the tires.

1. Measure:
   - tire pressure
     Out of specification → Regulate.

WARNING

- **The tire pressure should only be checked and regulated when the tire temperature equals the ambient air temperature.**
- **The tire pressure and the suspension must be adjusted according to the total weight (including cargo, rider, passenger and accessories) and the anticipated riding speed.**
- **Operation of an overloaded motorcycle could cause tire damage, an accident or an injury.**

NEVER OVERLOAD THE MOTORCYCLE.

Basic weight (with oil and a full fuel tank)	188 kg	
Maximum load*	187 kg	
Cold tire pressure	Front	Rear
Up to 90 kg (198 lb) load*	250 kPa (2.5 kg/cm^2, 36.3 psi)	250 kPa (2.5 kg/cm^2, 36.3 psi)
90 kg (198 lb) ~maximum load*	250 kPa (2.5 kg/cm^2, 36.3 psi)	290 kPa (2.9 kg/cm^2, 42.1 psi)
High-speed riding	250 kPa (2.5 kg/cm^2, 36.3 psi)	250 kPa (2.5 kg/cm^2, 36.3 psi)

* total of cargo, rider, passenger and accessories

WARNING

It is dangerous to ride with a worn-out tire. When the tire tread reaches the wear limit, replace the tire immediately.

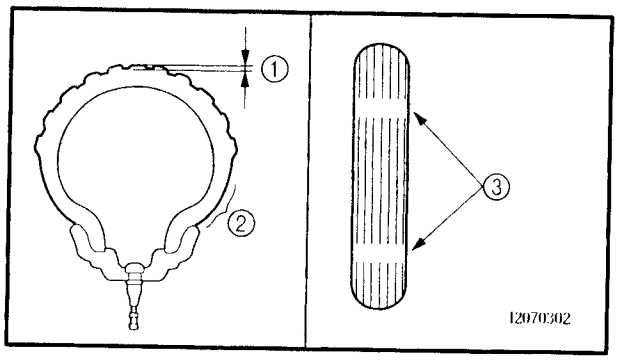

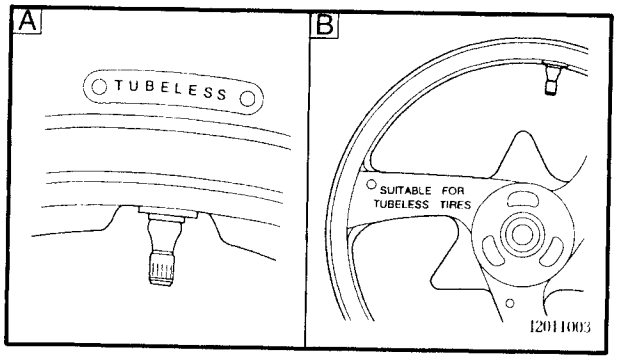

2. Check:
   - tire surfaces
     Damage/wear → Replace the tire.

Minimum tire tread depth
1.6 mm (0.06 in)

① Tire tread depth
② Side wall
③ Wear indicator

⚠ WARNING

- **Do not use a tubeless tire on a wheel designed only for tube tires to avoid tire failure and personal injury from sudden deflation.**
- **When using a tube tire, be sure to install the correct tube.**
- **Always replace a new tube tire and a new tube as a set.**
- **To avoid pinching the tube, make sure that the wheel rim band and tube are centered in the wheel groove.**
- **Patching a punctured tube is not recommended. If it is absolutely necessary to do so, use great care and replace the tube as soon as possible with a good quality replacement.**

A Tire B Wheel

Tube wheel	**Tube tire only**
Tubeless wheel	**Tube or tubeless tire**

- **After extensive tests, the tires listed below have been approved by Yamaha Motor Co., Ltd. for this model. The front and rear tires should always be by the same manufacturer and of the same design. No guarantee concerning handling characteristics can be given if a tire combination other than one approved by Yamaha is used on this motorcycle.**

Front tire

Manufacturer	Size	Model
BRIDGESTONE	120/60 ZR17 (55W)	BT56F•E
DUNLOP	120/60 ZR17 (55W)	D207F•J

Rear tire

Manufacturer	Size	Model
BRIDGESTONE	180/55 ZR17 (73W)	BT56R•E
DUNLOP	180/55 ZR17 (73W)	D207•N

WARNING

New tires have a relatively low grip on the road surface until they have been slightly worn. Therefore, approximately 100 km sould be traveled at normal speed before any highspeed riding is done.

NOTE:

For tires with a direction of rotation mark ①:
- Install the tire with the mark pointing in the direction of wheel rotation.
- Align the mark ② with the valve installation point.

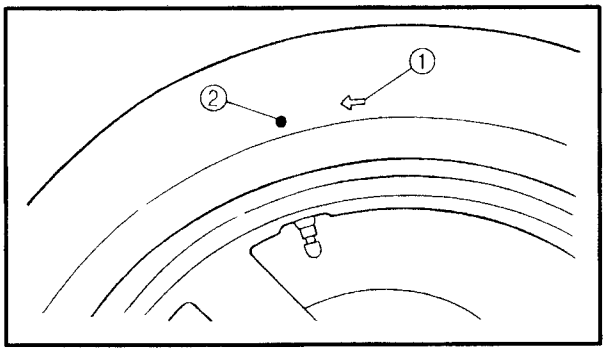

EB304180

CHECKING THE WHEELS

The following procedure applies to both of the wheels.

1. Check:
   - wheel
     Damage/out-of-round → Replace.

WARNING

Never attempt to make any repairs to the wheel.

NOTE:

After a tire or wheel has been changed or replaced, always balance the wheel.

EB304200

CHECKING AND LUBRICATING THE CABLES

The following procedure applies to all of the cable sheaths and cables.

WARNING

Damaged cable sheaths may cause the cable to corrode and interfere with its movement. Replace damaged cable sheaths and cables as soon as possible.

1. Check:
   - cable sheath
     Damage → Replace.
2. Check:
   - cable operation
     Rough movement → Lubricate.

Recommended lubricant
Engine oil or a suitable cable lubricant

NOTE:

Hold the cable end upright and pour a few drops of lubricant into the cable sheath or use a suitable lubing device.

EB304210

LUBRICATING THE LEVERS AND PEDALS

Lubricate the pivoting point and metal-to-metal moving parts of the levers and pedals.

Recommended lubricant
Lithium soap base grease

EB304220

LUBRICATING THE SIDESTAND

Lubricate the pivoting point and metal-to-metal moving parts of the sidestand.

Recommended lubricant
Lithium soap base grease

EB304240

LUBRICATING THE REAR SUSPENSION

Lubricate the pivoting point and metal-to-metal moving parts of the rear suspension.

Recommended lubricant
Lithium soap base grease

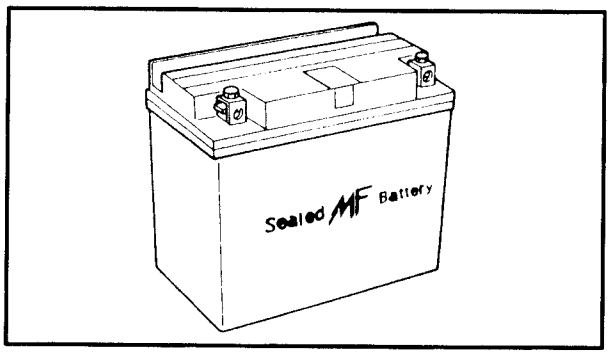

EB305020

ELECTRICAL SYSTEM

CHECKING AND CHARGING THE BATTERY

WARNING

Batteries generate explosive hydrogen gas and contain electrolyte which is made of poisonous and highly caustic sulfuric acid. Therefore, always follow these preventive measures:

- **Wear protective eye gear when handling or working near batteries.**
- **Charge batteries in a well-ventilated area.**
- **Keep batteries away from fire, sparks or open flames (e.g., welding equipment, lighted cigarettes).**
- **DO NOT SMOKE when charging or handling batteries.**
- **KEEP BATTERIES AND ELECTROLYTE OUT OF REACH OF CHILDREN.**
- **Avoid bodily contact with electrolyte as it can cause severe burns or permanent eye injury.**

FIRST AID IN CASE OF BODILY CONTACT:
EXTERNAL

- **Skin – Wash with water**
- **Eyes – Flush with water for 15 minutes and get immediate medical attention.**

INTERNAL

- **Drink large quantities of water or milk followed with milk of magnesia, beaten egg or vegetable oil. Get immediate medical attention.**

CAUTION:

- **This is a sealed battery. Never remove the sealing caps because the balance between cells will not be maintained and battery performance will deteriorate.**
- **Charging time, charging amperage and charging voltage for an MF battery are different from those of conventional batteries. The MF battery should be charged as explained in the charging method illustrations. If the battery is overcharged, the electrolyte level will drop considerably. Therefore, take special care when charging the battery.**

NOTE:

Since MF batteries are sealed, it is not possible to check the charge state of the battery by measuring the specific gravity of the electrolyte. Therefore, the charge of the battery has to be checked by measuring the voltage at the battery terminals.

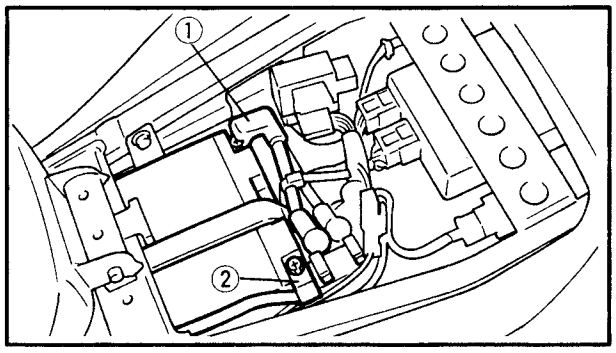

1. Remove:
   - rider seat
     Refer to "SEATS".
2. Disconnect:
   - battery leads
     (from the battery terminals)

CAUTION:

First, disconnect the negative lead ②, then the positive lead ①.

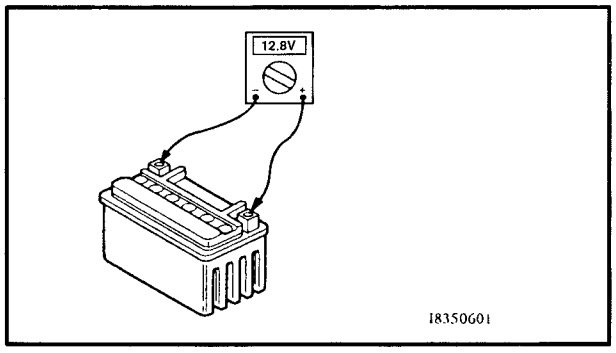

3. Remove:
   - battery
4. Measure:
   - battery charge

▼▼▼▼▼▼▼▼▼▼▼▼▼▼▼▼▼▼▼▼▼▼▼▼▼▼▼▼▼▼▼▼

a. Connect a digital voltmeter to the battery terminals.

Tester positive probe → battery positive terminal
Tester negative probe → battery negative terminal

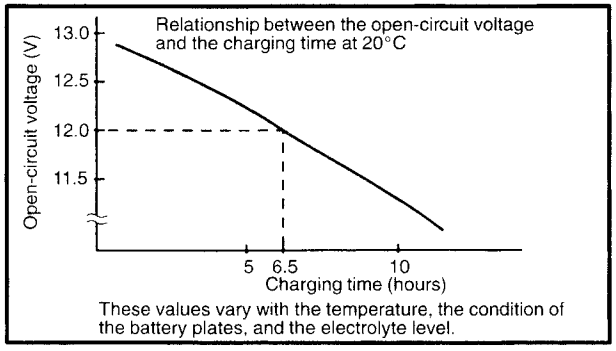

NOTE:

- The charge state of an MF battery can be checked by measuring its open-circuit voltage (i.e., the voltage when the positive terminal is disconnected).
- No charging is necessary when the open-circuit voltage equals or exceeds 12.8 V.

b. Check the charge of the battery, as shown in the charts and the following example.

Example

Open-circuit voltage = 12.0 V
Charging time = 6.5 hours
Charge of the battery = 20 ~ 30%

▲▲▲▲▲▲▲▲▲▲▲▲▲▲▲▲▲▲▲▲▲▲▲▲▲▲▲▲▲▲▲▲

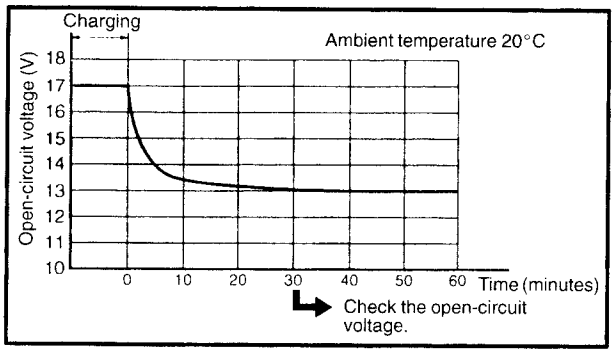

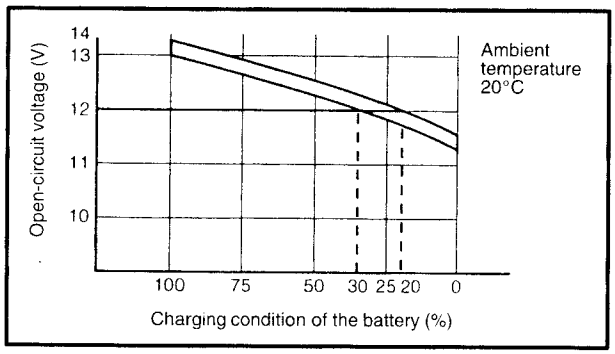

5. Charge:
   - battery
     (refer to the appropriate charging method illustration)

⚠ WARNING

Do not quick charge a battery.

CAUTION:

- **Never remove the MF battery sealing caps.**
- **Do not use a high-rate battery charger since it forces a high-amperage current into the battery quickly and can cause battery overheating and battery plate damage.**
- **If it is impossible to regulate the charging current on the battery charger, be careful not to overcharge the battery.**
- **When charging a battery, be sure to remove it from the motorcycle. (If charging has to be done with the battery mounted on the motorcycle, disconnect the negative lead from the battery terminal.)**
- **To reduce the chance of sparks, do not plug in the battery charger until the battery charger leads are connected to the battery.**
- **Before removing the battery charger lead clips from the battery terminals, be sure to turn off the battery charger.**
- **Make sure that the battery charger lead clips are in full contact with the battery terminal and that they are not shorted. A corroded battery charger lead clip may generate heat in the contact area and a weak clip spring may cause sparks.**
- **If the battery becomes hot to the touch at any time during the charging process, disconnect the battery charger and let the battery cool before reconnecting it. Hot batteries can explode!**
- **As shown in the following illustration, the open-circuit voltage of an MF battery stabilizes about 30 minutes after charging has been completed. Therefore, wait 30 minutes after charging is completed before measuring the open-circuit voltage.**

Charging method using a variable-voltage charger

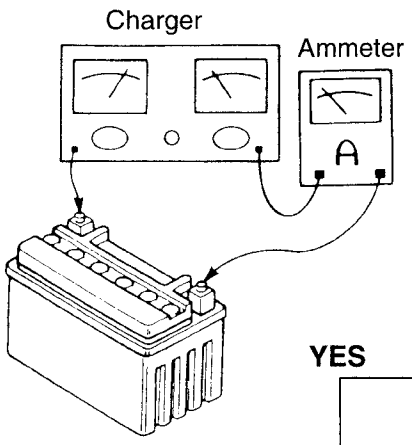

Measure the open-circuit voltage prior to charging.

NOTE:
Leave the battery unused for more than 30 minutes before measuring its open-circuit voltage.

Connect a charger and ammeter to the battery and start charging.

NOTE:
Set the charging voltage to 16 ~ 17 V. (If the charging voltage is lower, charging will be insufficient, if it is higher, the battery will be over-charged.)

Is the amperage higher than the standard charging amperage written on the battery?

YES → Adjust the voltage to obtain the standard charging amperage.

NO → Adjust the charging voltage to 20 ~ 25 V.

Monitor the amperage for 3 ~ 5 minutes. Is the standard charging amperage exceeded?

YES → Adjust the voltage to obtain the standard charging amperage.

NO → If the amperage does not exceed the standard charging amperage after 5 minutes, replace the battery.

Set the timer to the charging time determined by the open-circuit voltage.
Refer to "CHECKING AND CHARGING THE BATTERY".

If the required charging time exceeds 5 hours, it is advisable to check the charging amperage after 5 hours. If there is any change in the amperage, readjust the voltage to obtain the standard charging amperage.

Leave the battery unused for more than 30 minutes before measuring its open-circuit voltage.
12.8 V → Charging is complete.
12.0 ~ 12.7 V → Recharging is required.
Under 12.0 V → Replace the battery.

Charging method using a constant-voltage charger

Measure the open-circuit voltage prior to charging.

NOTE:
Leave the battery unused for more than 30 minutes before measuring its open-circuit voltage.

↓

Connect a charger and ammeter to the battery and start charging.

↓

Is the amperage higher than the standard charging amperage written on the battery?

YES →

Charge the battery until the charging voltage reaches 15 V.

NOTE:
Set the charging time to a maximum of 20 hours.

↓

Leave the battery unused for more than 30 minutes before measuring its open-circuit voltage.
12.8 V → Charging is complete.
12.0 ~ 12.7 V → Recharging is required.
Under 12.0 V → Replace the battery.

CAUTION:
Constant amperage chargers are not suitable for charging MF batteries.

NO →

This type of battery charger cannot charge an MF battery. A variable-voltage charger is recommended.

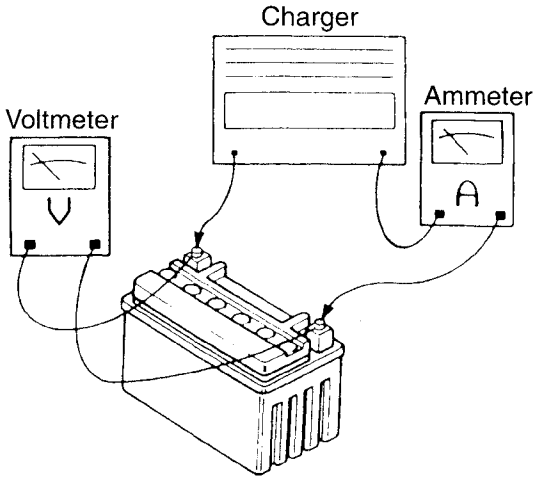

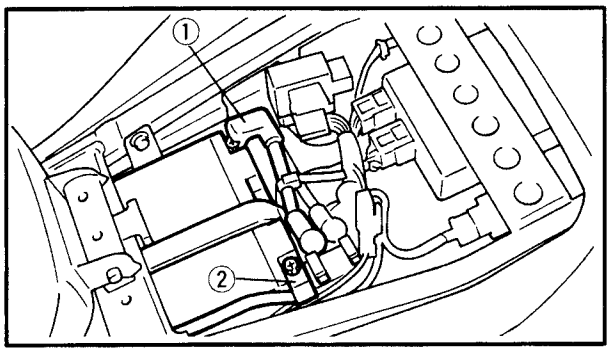

6. Install:
   - battery
7. Connect:
   - battery leads
     (to the battery terminals)

CAUTION:

First, connect the positive lead ①, then the negative lead ②.

8. Check:
   - battery terminals
     Dirt → Clean with a wire brush.
     Loose connection → Connect properly.
9. Lubricate:
   - battery terminals

	Recommended lubricant **Dielectric grease**

10. Install:
    - rider seat
      Refer to "SEATS".

EB305040

CHECKING THE FUSES

The following procedure applies to all of the fuses.

CAUTION:

To avoid a short circuit, always set the main switch to "OFF" when checking or replacing a fuse.

1. Remove:
   - rider seat
     Refer to "SEATS".
2. Check:
   - continuity

▼▼▼▼▼▼▼▼▼▼▼▼▼▼▼▼▼▼▼▼▼▼▼▼▼▼▼▼▼▼▼▼

a. Connect the pocket tester to the fuse and check the continuity.

NOTE:

Set the pocket tester selector to "Ω × 1".

	Pocket tester **90890-03112, YU-03112**

b. If the pocket tester indicates "∞", replace the fuse.

▲▲▲▲▲▲▲▲▲▲▲▲▲▲▲▲▲▲▲▲▲▲▲▲▲▲▲▲▲▲▲▲

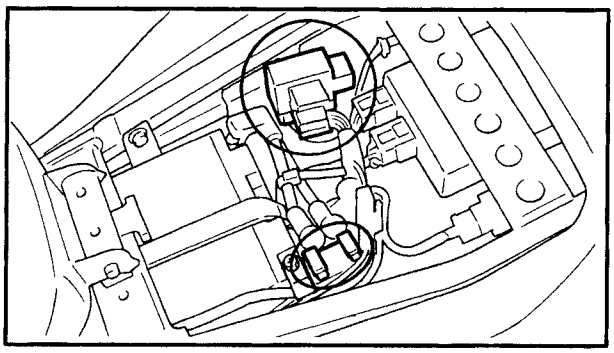

3. Replace:
   - blown fuse

▼▼▼▼▼▼▼▼▼▼▼▼▼▼▼▼▼▼▼▼▼▼▼▼▼▼▼▼▼▼▼▼

a. Set the main switch to "OFF".
b. Install a new fuse of the correct amperage.
c. Set the main switch to "ON" and verify if the electrical circuit is operational.
d. If the fuse immediately blows again, check the electrical circuit.

▲▲▲▲▲▲▲▲▲▲▲▲▲▲▲▲▲▲▲▲▲▲▲▲▲▲▲▲▲▲▲▲

Item	Amperage	Q'ty
Main fuse	30 A	1
Headlight fuse	20 A	1
Signaling system fuse	20 A	1
Ignition fuse	15 A	1
Radiator fan motor fuse	7.5 A	1
Backup fuse (odometer)	7.5 A	1

⚠ WARNING

Never use a fuse with an amperage other than that specified. Improvising or using a fuse with the wrong amperage rating may cause extensive damage to the electrical system, cause the lighting and ignition systems to malfunction and could possibly cause a fire.

4. Install:
   - rider seat
     Refer to "SEATS".

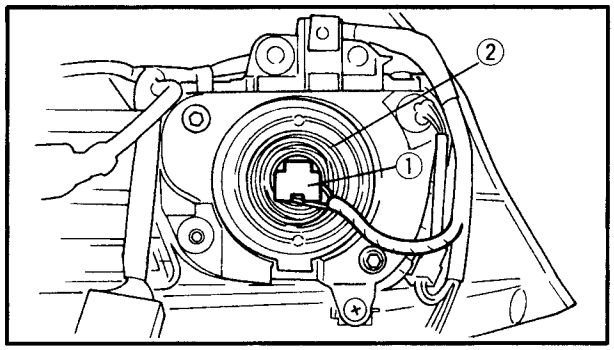

EB305051

REPLACING THE HEADLIGHT BULBS

The following procedure applies to both of the headlight bulbs.

1. Disconnect:
   - headlight coupler ①
   - headlight bulb holder cover ②

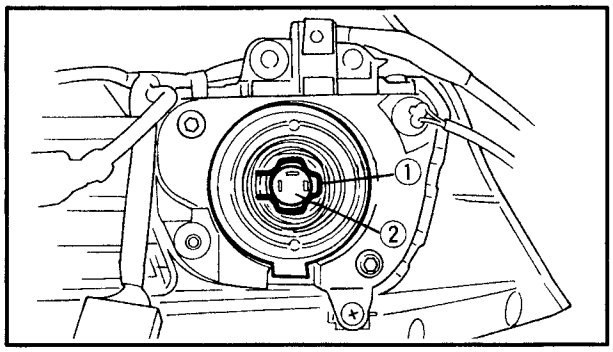

2. Detach:
   - headlight bulb holder ①
3. Remove:
   - headlight bulb ②

⚠ WARNING

Since the headlight bulb gets extremely hot, keep flammable products and your hands away from the bulb until it has cooled down.

4. Install:
   - headlight bulb New

   Secure the new headlight bulb with the headlight bulb holder.

CAUTION:

Avoid touching the glass part of the headlight bulb to keep it free from oil, otherwise the transparency of the glass, the life of the bulb and the luminous flux will be adversely affected. If the headlight bulb gets soiled, thoroughly clean it with a cloth moistened with alcohol or lacquer thinner.

5. Attach:
   - headlight bulb holder
6. Install:
   - headlight bulb holder cover
7. Connect:
   - headlight coupler

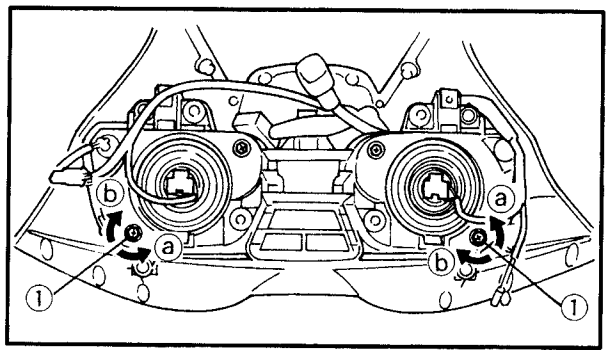

EB305061

ADJUSTING THE HEADLIGHT BEAMS

The following procedure applies to both of the headlights.

1. Adjust:
   - headlight beam (vertically)

▼▼▼▼▼▼▼▼▼▼▼▼▼▼▼▼▼▼▼▼▼▼▼▼▼▼▼▼▼▼▼▼

a. Turn the adjusting screw ① in direction ⓐ or ⓑ.

Direction ⓐ	**Headlight beams is raised.**
Direction ⓑ	**Headlight beams is lowered.**

▲▲▲▲▲▲▲▲▲▲▲▲▲▲▲▲▲▲▲▲▲▲▲▲▲▲▲▲▲▲▲▲

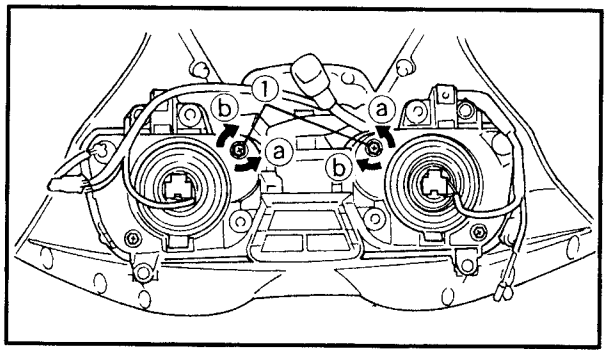

2. Adjust:
   - headlight beam (horizontally)

▼▼▼▼▼▼▼▼▼▼▼▼▼▼▼▼▼▼▼▼▼▼▼▼▼▼▼▼▼▼▼▼

a. Turn the adjusting knob ① in direction ⓐ or ⓑ.

Left headlight

Direction ⓐ	**Headlight beam moves to the right.**
Direction ⓑ	**Headlight beams moves to the left.**

Right headlight

Direction ⓐ	**Headlight beam moves to the left.**
Direction ⓑ	**Headlight beam moves to the right.**

▲▲▲▲▲▲▲▲▲▲▲▲▲▲▲▲▲▲▲▲▲▲▲▲▲▲▲▲▲▲▲▲